1. ALL RESISTANCE VALUES ARE IN OHMS, 0.1 WATT +/- 5%.
2. ALL CAPACITANCE VALUES ARE IN MICROFARADS.
3. ALL CRYSTALS & OSCILLATOR VALUES ARE IN HERTZ.

| REV | ECN | DESCRIPTION OF REVISION | CK APPD / DATE |
|---|---|---|---|
| 8 | 0006532879 | ENGINEERING RELEASED | 2016-07-06 |

# D11 MLB - PVT

LAST_MODIFICATION=Wed Jul 6 08:55:26 2016


| PAGE | <CSA> | CONTENTS | SYNC | DATE |
|---|---|---|---|---|
| 1 | 1 | TABLE OF CONTENTS | <SYNC_MASTER1> | <SYNC_DATE1> |
| 2 | 2 | SYSTEM:BOM TABLES | <SYNC_MASTER2> | <SYNC_DATE2> |
| 3 | 3 | SYSTEM:EEEE CALLOUTS | <SYNC_MASTER3> | <SYNC_DATE3> |
| 4 | 4 | SYSTEM:MECHANICAL COMPONENTS | <SYNC_MASTER4> | <SYNC_DATE4> |
| 5 | 5 | SYSTEM: BOARDID | <SYNC_MASTER5> | <SYNC_DATE5> |
| 6 | 6 | spare | | |
| 7 | 7 | SOC:JTAG,USB,XTAL | | |
| 8 | 8 | SOC:PCIE | | |
| 9 | 9 | SOC:MIPI AND ISP | | |
| 10 | 10 | SOC:LPDP | | |
| 11 | 11 | SOC:SERIAL | | |
| 12 | 12 | SOC:GPIO & UART | | |
| 13 | 13 | SOC:AOP | | |
| 14 | 14 | SOC:POWER (1/3) | | |
| 15 | 15 | SOC:POWER (2/3) | | |
| 16 | 16 | SOC:POWER (3/3) | | |
| 17 | 17 | NAND | | |
| 18 | 18 | SYSTEM POWER:PMU (1/3) | | |
| 19 | 19 | SYSTEM POWER:PMU (2/3) | | |
| 20 | 20 | SYSTEM POWER:PMU (3/3) | | |
| 21 | 21 | SYSTEM POWER:CHARGER | | |
| 22 | 22 | SYSTEM POWER:BATTERY CONN | | |
| 23 | 23 | SYSTEM POWER:BOOST | | |
| 24 | 24 | SENSORS | | |
| 25 | 25 | B2B FILTERS: UTAH | | |
| 26 | 26 | CAMERA:STROBE DRIVER | | |
| 27 | 27 | Accessory: Buck Circuit | | <SYNC_DATE27> |
| 28 | 28 | TRINITY:FF SPECIFIC | | |
| 29 | 29 | B2B:FOREHEAD | | |
| 30 | 30 | B2B:NEVADA | | <SYNC_DATE30> |
| 31 | 31 | AUDIO:CALTRA CODEC (1/2) | | |
| 32 | 32 | AUDIO:CALTRA CODEC (2/2) | | |
| 33 | 33 | AUDIO:SPEAKER AMP 2 | | |
| 34 | 34 | AUDIO:SPEAKER AMP 1 | | |
| 35 | 35 | ARC:DRIVER | | |
| 36 | 36 | ARC:MAGGIE | | |
| 37 | 37 | DISPLAY & MESA:POWER | | |
| 38 | 38 | B2B:ORB & MESA | | |
| 39 | 39 | B2B FILTERS: DISPLAY & TOUCH | | |
| 40 | 40 | TRISTAR 2 | | |
| 41 | 41 | B2B:DOCK FLEX | | |
| 42 | 42 | spare | | |
| 43 | 43 | spare | | |
| 44 | 44 | B2B FILTERS: RIGHT BUTTON FLEX | | |
| 45 | 45 | B2B FF SPECIFIC | | |
| 46 | 46 | LARGE FORM FACTOR SPECIFIC | | <SYNC_DATE46> |
| 47 | 47 | I2C MAP: AP, TOUCH, HOMER, I2C5 | | |
| 48 | 48 | I2C MAP AOP | <SYNC_MASTER48> | <SYNC_DATE48> |
| 49 | 49 | I2C TABLE | <SYNC_MASTER49> | <SYNC_DATE49> |
| 50 | 50 | spare | <SYNC_MASTER50> | <SYNC_DATE50> |
| 51 | 51 | spare | <SYNC_MASTER51> | <SYNC_DATE51> |
| 52 | 52 | MLB UNIQUE | <SYNC_MASTER52> | <SYNC_DATE52> |
| 53 | 53 | CELL,WIFI,NFC | <SYNC_MASTER53> | <SYNC_DATE53> |
| 54 | 54 | page1 | | |
| 55 | 55 | NFC | | |
| 56 | 56 | page1 | | |
| 57 | 57 | METROCIRC [2] | | |
| 58 | 58 | UAT MATCH AND TUNER [3] | | |
| 59 | 59 | WIFI_MLB SCHEMATIC | | |
| 60 | 60 | PERENNIAL | | |
| 61 | 61 | WIFI FRONT-END [77] | | |
| 62 | 62 | page1 | | |
| 63 | 63 | BOM_OMIT_TABLE | | |
| 64 | 64 | PMU: CONTROL AND CLOCKS | | |
| 65 | 65 | PMU: SWITCHERS AND LDOS | | |
| 66 | 66 | BASEBAND: POWER2 | | |
| 67 | 67 | BASEBAND: CONTROL | | |
| 68 | 68 | BASEBAND GPIOS | | |
| 69 | 69 | TRANSCEIVER0/1: POWER | | |
| 70 | 70 | TRANSCEIVER0/1: TX PORTS | | |
| 71 | 71 | TRANSCEIVER0/1: PRX PORTS | <SYNC_MASTER71> | <SYNC_DATE71> |
| 72 | 72 | RECEIVE MATCHING | <SYNC_MASTER72> | <SYNC_DATE72> |
| 73 | 73 | LOWER ANTENNA & COUPLERS | <SYNC_MASTER73> | <SYNC_DATE73> |
| 74 | 74 | DIVERSITY RECEIVE ASM'S | <SYNC_MASTER74> | <SYNC_DATE74> |
| 75 | 75 | DIVERSITY RECEIVE LNA'S | d | |
| 76 | 76 | UPPER ANTENNA FEEDS | | |
| 77 | 77 | PMU: ET MODULATOR | | |
| 78 | <CSA_PAGE78> | TEST POINTS & BOOT CONFIG | <SYNC_MASTER78> | <SYNC_DATE78> |
| 79 | <CSA_PAGE79> | TDD TRANSMIT | <SYNC_MASTER79> | <SYNC_DATE79> |
| 80 | <CSA_PAGE80> | FDD TRANSMIT | <SYNC_MASTER80> | <SYNC_DATE80> |
| 81 | <CSA_PAGE81> | ICEFALL, SIM, DEBUG_CONN | <SYNC_MASTER81> | <SYNC_DATE81> |
| | <CSA_PAGE82> | | <SYNC_MASTER82> | <SYNC_DATE82> |
| | <CSA_PAGE83> | | <SYNC_MASTER83> | <SYNC_DATE83> |
| | <CSA_PAGE84> | | <SYNC_MASTER84> | <SYNC_DATE84> |
| | <CSA_PAGE85> | | <SYNC_MASTER85> | <SYNC_DATE85> |
| | <CSA_PAGE86> | | <SYNC_MASTER86> | <SYNC_DATE86> |
| | <CSA_PAGE87> | | <SYNC_MASTER87> | <SYNC_DATE87> |
| | <CSA_PAGE88> | | <SYNC_MASTER88> | <SYNC_DATE88> |
| | <CSA_PAGE89> | | <SYNC_MASTER89> | <SYNC_DATE89> |
| | <CSA_PAGE90> | | <SYNC_MASTER90> | <SYNC_DATE90> |


TABLE OF CONTENTS

VIETMOBILE.VN

## Schematic & PCB Callouts

| PART# | QTY | DESCRIPTION | REFERENCE DESIGNATOR(S) | CRITICAL | BOM OPTION |
|---|---|---|---|---|---|
| 051-00482 | 1 | SCH,MLB,D11-12 | SCH | CRITICAL | ? |
| 820-00229 | 1 | PCBF,MLB,D11-12 | PCB | CRITICAL | ? |

SCH 051-00482
BRD 820-00229
MCO 056-01585

## System Block Diagram:

<rdar://problem/16684269>

SYNC_MASTER=david-copy SYNC_DATE=03/01/2016

DRAWING TITLE
SCH,MLB,D11

Apple Inc.

DRAWING NUMBER 051-00482 SIZE D
REVISION 8.0.0
BRANCH
PAGE 1 OF 53
SHEET 1 OF 81

NOTICE OF PROPRIETARY PROPERTY:
THE INFORMATION CONTAINED HEREIN IS THE PROPRIETARY PROPERTY OF APPLE INC.
THE POSESSOR AGREES TO THE FOLLOWING:
I TO MAINTAIN THIS DOCUMENT IN CONFIDENCE
II NOT TO REPRODUCE OR COPY IT
III NOT TO REVEAL OR PUBLISH IT IN WHOLE OR PART
IV ALL RIGHTS RESERVED

# NAND BOM Options

| PART# | QTY | DESCRIPTION | REFERENCE DESIGNATOR(S) | CRITICAL | BOM OPTION |
|---|---|---|---|---|---|
| 335S00169 | 1 | NAND,H,32GB,16nm,MLC | U1701 | CRITICAL | NAND_32G |
| 335S00182 | 1 | NAND,H,128GB,16nm,TLC | U1701 | CRITICAL | NAND_128G |
| 335S00183 | 1 | NAND,T,256GB,3Dv3,TLC | U1701 | CRITICAL | NAND_256G |
| 138S0867 | 5 | CAP,X5R,10uF,20%,6.3V,0.65MM,HRZTL,0402 | C1748,C1713,C1716,C1721,C1733 | CRITICAL | NAND_32G |
| 138S00003 | 5 | CAP,X5R,15uF,20%,,6.3V,0.65MM,HRZTL,0402 | C1748,C1713,C1716,C1721,C1733 | CRITICAL | NAND_128G |
| 138S00003 | 5 | CAP,X5R,15uF,20%,,6.3V,0.65MM,HRZTL,0402 | C1748,C1713,C1716,C1721,C1733 | CRITICAL | NAND_256G |

| PART NUMBER | ALTERNATE FOR PART NUMBER | BOM OPTION | REF DES | COMMENTS: |
|---|---|---|---|---|
| 335S00201 | 335S00169 | ALTERNATE | U1701 | T,15nm,MLC,32GB |
| 335S00209 | 335S00169 | ALTERNATE | U1701 | S,16nm,MLC,32GB |
| 335S00195 | 335S00182 | ALTERNATE | U1701 | SS,1Ynm,TLC,128GB |
| 335S00180 | 335S00182 | ALTERNATE | U1701 | T,15nm,TLC,128GB |
| 335S00179 | 335S00182 | ALTERNATE | U1701 | SD,15nm,TLC,128GB |
| 335S00148 | 335S00183 | ALTERNATE | U1701 | SD,3Dv2,TLC,256GB |
| 335S00190 | 335S00183 | ALTERNATE | U1701 | SS,3Dv3,TLC,256GB |

#22686038:See Radar

# Magnesium Alternates

| PART NUMBER | ALTERNATE FOR PART NUMBER | BOM OPTION | REF DES | COMMENTS: |
|---|---|---|---|---|
| 338S00173 | 338S00203 | ALTERNATE | U2402 | Larger Wafer (-29 flow) Magnesium |

# UT LDO Alternates

| PART NUMBER | ALTERNATE FOR PART NUMBER | BOM OPTION | REF DES | COMMENTS: |
|---|---|---|---|---|
| 353S00889 | 353S00015 | ALTERNATE | U2501 | ST, LDO REG, 2.925V, CSP 0.65x0.65 |

# Mamba LDO Alternates

| PART NUMBER | ALTERNATE FOR PART NUMBER | BOM OPTION | REF DES | COMMENTS: |
|---|---|---|---|---|
| 353S00932 | 353S00576 | ALTERNATE | U3801 | ST, LDO REG, 2.75V |

# I2C5 Alternate

| PART NUMBER | ALTERNATE FOR PART NUMBER | BOM OPTION | REF DES | COMMENTS: |
|---|---|---|---|---|
| 335S00234 | 335S00233 | ALTERNATE | U1101 | I2C5 ALTERNATE |

# Active Diode Alternate

| PART NUMBER | ALTERNATE FOR PART NUMBER | BOM OPTION | REF DES | COMMENTS: |
|---|---|---|---|---|
| 376S00106 | 376S00047 | ALTERNATE | Q2101 | DIODES INC. ACT DIODE |

# DDR PLL Alternate

| PART NUMBER | ALTERNATE FOR PART NUMBER | BOM OPTION | REF DES | COMMENTS: |
|---|---|---|---|---|
| 155S00095 | 155S00068 | ALTERNATE | FL1501 | FERR BD,100OHM,25%,100MA,230MR,01005 |

# Power Inductor Alternates

| PART NUMBER | ALTERNATE FOR PART NUMBER | BOM OPTION | REF DES | COMMENTS: | |
|---|---|---|---|---|---|
| 152S00118 | 152S00075 | ALTERNATE | ALL | IND,PWR,SHLD,1.2 UH,3.0A,0.080 OHM,2016 | |
| 152S00077 | 152S00397 | ALTERNATE | ALL | IND,PWR,SHLD,1.0 UH,2.25A,0.150 OHM,2016 | updated 11/12 |
| 152S00121 | 152S00081 | ALTERNATE | ALL | IND,PWR,SHLD,0.47 UH,3.8A,0.048 OHM,2012 | |
| 152S00123 | 152S1936 | ALTERNATE | ALL | IND,PWR,SHLD,15 UH,0.72A,0.900 OHM,3225 | |
| 152S00402 | 152S00366 | ALTERNATE | ALL | IND,MULT,SUM,1.2A,0.320 OHM,0603 | updated 11/12 |
| 152S00297 | 152S1843 | ALTERNATE | ALL | CYWTEC 2012 33H | reverted 11/13 |
| 152S00365 | 152S00297 | ALTERNATE | ALL | CYWTEC 2012 33H | |
| 152S00398 | 152S00204 | ALTERNATE | ALL | IND,PWR,0.22UH,20%,6.7a,22MOHM,2012 | For Chestnut inductor; so it doesn't interfere with PMU inducotr Buck 7 alts |
| 152S00120 | 152S00077 | ALTERNATE | ALL | For Chestnut inductor only | Except BUCK5 LX (BUCK5 LX is Taiyo only) |
| 152S00117 | 152S00074 | ALTERNATE | L600,L601,L602,L603,L607 | IND,PWR,SHLD,1.0 UH,3.0A,0.060 OHM,2016 | |

# Global R/C Alternates

| PART NUMBER | ALTERNATE FOR PART NUMBER | BOM OPTION | REF DES | COMMENTS: |
|---|---|---|---|---|
| 118S0764 | 118S0717 | ALTERNATE | ALL | RES, 3.92K, 0.1%, 0201 |
| 138S0702 | 138S0657 | ALTERNATE | ALL | CAP, X5R, 4.3UF, 4V, 0610 |
| 138S00006 | 138S0835 | ALTERNATE | ALL | CAP, 3-TERM, 4.3UF, 4V, 0402 |
| 138S0648 | 138S0652 | ALTERNATE | ALL | CAP,X5R,4.7uF,6.3V,0.65MM,0402,TAIYO |
| 132S0400 | 132S0436 | ALTERNATE | ALL | CAP,X5R,0.22UF,6.3V,01005,TDK |
| 138S00024 | 138S0986 | ALTERNATE | ALL | CAP,C0G,5-TERM,7.5uF,20%,4V,0402,TAIYO/TDK |
| 138S0706 | 138S0739 | ALTERNATE | ALL | CAP,C0B,1UF,20%,10V,X5R,0201,MURATA |
| 138S0945 | 138S0739 | ALTERNATE | ALL | CAP,C0B,1UF,20%,10V,X5R,0201,KYOCERA |
| 132S0436 | 132S0400 | ALTERNATE | ALL | CAP,C0B,X5R,0.22UF,20%,6.3V,20% |

# Global Ferrite Alternates

| PART NUMBER | ALTERNATE FOR PART NUMBER | BOM OPTION | REF DES | COMMENTS: |
|---|---|---|---|---|
| 155S00067 | 155S0581 | ALTERNATE | ALL | FERR, 240OHM, 0.38OHM DCR, 0201 |
| 155S0581 | 155S00067 | ALTERNATE | ALL | FERR, 240OHM, 0.38OHM DCR, 0201 |
| 155S00012 | 155S00168 | ALTERNATE | ALL | FLTR, 65 OHMS, 0605 |
| 155S00194 | 155S0610 | ALTERNATE | ALL | FERR BD, 150OHM, TDK |
| 155S00200 | 155S0610 | ALTERNATE | ALL | FERR BD, 150OHM, TY |
| 152S00489 | 152S00456 | ALTERNATE | ALL | FERR BD, 0.47UH, TY |

# Global Varistor Alternates

| PART NUMBER | ALTERNATE FOR PART NUMBER | BOM OPTION | REF DES | COMMENTS: |
|---|---|---|---|---|
| 377S0168 | 377S0140 | ALTERNATE | ALL | VARISTOR, 6.8V, 180PF, 01005 |

# Acc Buck Alternates

| PART NUMBER | ALTERNATE FOR PART NUMBER | BOM OPTION | REF DES | COMMENTS: |
|---|---|---|---|---|
| 371S00087 | 371S00064 | ALTERNATE | D2700 | DIODE,SHOTTKY,30V,200MA,0201 |
| 152S00558 | 152S00557 | ALTERNATE | L2700 | IND,MLD,0.47UH,2.5A,80MOhm,1608 |
| 376S00166 | 376S00164 | ALTERNATE | Q2700,Q2701 | PFET,12V,CSP4 |

# Load Switch OMIT TABLE

| PART# | QTY | DESCRIPTION | REFERENCE DESIGNATOR(S) | CRITICAL | BOM OPTION |
|---|---|---|---|---|---|
| 353S01007 | 1 | ONSEMI,IC,LOAD,SWITCH,WLCSP4 | U2710,NFCSW_RF | CRITICAL | |

# N&V 15uF Cap Alternates

| | PART NUMBER | ALTERNATE FOR PART NUMBER | BOM OPTION | REF DES | COMMENTS: | |
|---|---|---|---|---|---|---|
| MUR+KYO 15UF | 138S00005 | 138S00003 | ALTERNATE | C2010,C2025,C2031 | CAP,X5R,15uF,6.3V,0.65MM,0402,TY | |
| | 138S00005 | 138S00003 | ALTERNATE | C2037,C2042,C2044 | CAP,X5R,15uF,6.3V,0.65MM,0402,TY | CPU |
| | 138S00005 | 138S00003 | ALTERNATE | C2018,C2024,C2032 | CAP,X5R,15uF,6.3V,0.65MM,0402,TY | |
| | 138S00005 | 138S00003 | ALTERNATE | C2038,C2041,C2046 | CAP,X5R,15uF,6.3V,0.65MM,0402,TY | |
| | 138S00005 | 138S00003 | ALTERNATE | C2401,C2406,C2434 | CAP,X5R,15uF,6.3V,0.65MM,0402,TY | |
| | 138S00005 | 138S00003 | ALTERNATE | C2013,C2020,C2027 | CAP,X5R,15uF,6.3V,0.65MM,0402,TY | GPU + GPU_SRAM |
| | 138S00005 | 138S00003 | ALTERNATE | C2033,C2039,C2085 | CAP,X5R,15uF,6.3V,0.65MM,0402,TY | |
| | 138S00005 | 138S00003 | ALTERNATE | C2014,C2021,C2028 | CAP,X5R,15uF,6.3V,0.65MM,0402,TY | |
| | 138S00005 | 138S00003 | ALTERNATE | C2034,C2086,C2414 | CAP,X5R,15uF,6.3V,0.65MM,0402,TY | |
| | 138S00005 | 138S00003 | ALTERNATE | C2400,C2410 | CAP,X5R,15uF,6.3V,0.65MM,0402,TY | |
| | 138S00048 | 138S00003 | ALTERNATE | ALL | CAP,X5R,15uF,6.3V,0.65MM,0402,KYOCERA | |

VIETMOBILE.VN

PAGE TITLE
SYSTEM:BOM TABLES

Apple Inc.

DRAWING NUMBER 051-00482 SIZE D
REVISION 8.0.0
BRANCH
PAGE 2 OF 53
SHEET 2 OF 81

NOTICE OF PROPRIETARY PROPERTY:
THE INFORMATION CONTAINED HEREIN IS THE PROPRIETARY PROPERTY OF APPLE INC.
THE POSESSOR AGREES TO THE FOLLOWING:
I TO MAINTAIN THIS DOCUMENT IN CONFIDENCE
II NOT TO REPRODUCE OR COPY IT
III NOT TO REVEAL OR PUBLISH IT IN WHOLE OR PART
IV ALL RIGHTS RESERVED

# D11 EEEE CALLOUTS

| PART# | QTY | DESCRIPTION | REFERENCE DESIGNATOR(S) | CRITICAL | BOM OPTION |
|---|---|---|---|---|---|
| 825-6838 | 1 | EEEE CODE FOR 639-01812 | EEEE_GY2T | CRITICAL | EEEE_D11_BEST_JP |
| 825-6838 | 1 | EEEE CODE FOR 639-01813 | EEEE_GY2V | CRITICAL | EEEE_D11_SUPREME_JP |
| 825-6838 | 1 | EEEE CODE FOR 639-01814 | EEEE_GY2W | CRITICAL | EEEE_D11_EXTREME_JP |
| 825-6838 | 1 | EEEE CODE FOR 639-02138 | EEEE_H3RN | CRITICAL | EEEE_D11_BEST_ROW |
| 825-6838 | 1 | EEEE CODE FOR 639-02139 | EEEE_H3RP | CRITICAL | EEEE_D11_SUPREME_ROW |
| 825-6838 | 1 | EEEE CODE FOR 639-02140 | EEEE_H3RQ | CRITICAL | EEEE_D11_EXTREME_ROW |
| 825-6838 | 1 | EEEE CODE FOR 639-02460 | EEEE_H8C1 | CRITICAL | EEEE_D11_BEST_CH |
| 825-6838 | 1 | EEEE CODE FOR 639-02465 | EEEE_H8CK | CRITICAL | EEEE_D11_SUPREME_CH |
| 825-6838 | 1 | EEEE CODE FOR 639-02462 | EEEE_H8C3 | CRITICAL | EEEE_D11_EXTREME_CH |

## CAYMAN DDR Alternates

| | | | | |
|---|---|---|---|---|
| 339S00258 | 339S00257 | ALTERNATE | ALL | DDR-S, 3G, B1 |

## CAYMAN OMIT TABLE

| PART# | QTY | DESCRIPTION | REFERENCE DESIGNATOR(S) | CRITICAL | BOM OPTION |
|---|---|---|---|---|---|
| 339S00257 | 1 | CAYMAN, DDR-H, 3G, B1 | U0700 | CRITICAL | |

## 2.2uF CAP Alts

| PART NUMBER | ALTERNATE FOR PART NUMBER | BOM OPTION | REF DES | COMMENTS: |
|---|---|---|---|---|
| 138S00049 | 138S00032 | ALTERNATE | ALL | CAP,CER,X5R,2.2UF,0805X-3V,20%, KYOCERA |
| 138S0031 | 138S00032 | ALTERNATE | ALL | CAP,CER,X5R,2.2UF,20%,6.3V,20%,MURATA |

## SIP Alternates

| PART NUMBER | ALTERNATE FOR PART NUMBER | BOM OPTION | REF DES | COMMENTS: |
|---|---|---|---|---|
| 339M00009 | 339M00003 | ALTERNATE | ALL | TRINITY BLUE,STATS |
| 339M00008 | 339M00002 | ALTERNATE | ALL | NEO,STATS |

SYNC_MASTER=david-copy SYNC_DATE=03/01/2016

PAGE TITLE
SYSTEM:EEEE CALLOUTS

Apple Inc.

DRAWING NUMBER 051-00482
SIZE D
REVISION 8.0.0
BRANCH
PAGE 3 OF 53
SHEET 3 OF 81

NOTICE OF PROPRIETARY PROPERTY:
THE INFORMATION CONTAINED HEREIN IS THE PROPRIETARY PROPERTY OF APPLE INC.
THE POSESSOR AGREES TO THE FOLLOWING:
I TO MAINTAIN THIS DOCUMENT IN CONFIDENCE
II NOT TO REPRODUCE OR COPY IT
III NOT TO REVEAL OR PUBLISH IT IN WHOLE OR PART
IV ALL RIGHTS RESERVED

# Current as of D11 MCO 056-01585 rev. 63

0 0 Contained in radio_mlb pages

BS0415 2.70R1.80-NSP — UP_RFFE

BS0401 2.70R1.80-NSP — CHASSIS_GND_BS401

BS0402 STDOFF-2.90D0.888H-SM — CHASSIS_GND_BS402

BS0403 STDOFF-2.90D0.81H-SM — CHASSIS_GND_BS403

PTH per Rev63 for 1.8mm Drill

NEO Stiffener

0

NORTH SCREW EXPOSED

#25046211

C0413 220PF 5% 10V C0G-CERM 01005

C0414 56PF 5% 25V NP0-C0G-CERM 01005

C0415 18PF 2% 16V CERM 01005

C0416 4PF +/-0.1PF 16V NP0-C0G 01005

CHASSIS_GND_BS401

C0401 220PF 5% 10V C0G-CERM 01005

C0402 220PF 5% 10V C0G-CERM 01005

C0403 100PF 5% 16V NP0-C0G 01005

C0404 56PF 5% 25V NP0-C0G-CERM 01005

C0405 18PF 2% 16V CERM 01005

C0406 4PF +/-0.1PF 16V NP0-C0G 01005

CHASSIS_GND_BS402

C0407 220PF 5% 10V C0G-CERM 01005

C0408 220PF 5% 10V C0G-CERM 01005

C0409 100PF 5% 16V NP0-C0G 01005

C0410 56PF 5% 25V NP0-C0G-CERM 01005

C0411 18PF 2% 16V CERM 01005

C0412 4PF +/-0.1PF 16V NP0-C0G 01005

CHASSIS_GND_BS403

C0417 220PF 5% 10V C0G-CERM 01005

C0418 220PF 5% 10V C0G-CERM 01005

C0419 100PF 5% 16V NP0-C0G 01005

C0420 56PF 5% 25V NP0-C0G-CERM 01005

C0421 18PF 2% 16V CERM 01005

C0422 4PF +/-0.1PF 16V NP0-C0G 01005

## Front Shields

SH0401 SM — SHLD-UP-FRT-D11

SH0403 SM — SHLD-LOWER-FRT-D11

BS0404 2.70R1.80-NSP

## Back Shields

SH0400 SM — SHLD-SOFT-UP-BK-D11

SH0402 SM — SHLD-SOFT-LOWER-BK-D11

BS0405 STDOFF-2.90D0.888H-SM

BS0406 STDOFF-2.90D1.9ID-0.85H-SM

CLIP-COAX-RETENTION-D11 — CL0401 SM

## TESTPOINTS

### POWER

TP0420 — POWER GROUND

PP5V0_USB — TP0421 — VBUS

PP_BATT_VCC — TP0415, TP0422 — VBATT

PP_VDD_MAIN — TP0408 — VDD_MAIN

FD0408 FID 0P5SM1P0SQ-NSP — Note: Fiducial used as test point

### LCM

PP_LCM_BL_CAT1_CONN — TP0409 — LCM BACKLIGHT SINK1

PP_LCM_BL_CAT2_CONN — TP0410 — LCM BACKLIGHT SINK2

PP_LCM_BL_ANODE_CONN — TP0411 — LCM BACKLIGHT SOURCE

PP_LCM_BL34_CAT1_CONN — TP0417 — LCM BACKLIGHT SINK3

PP_LCM_BL34_CAT2_CONN — TP0419 — LCM BACKLIGHT SINK4

PP_LCM_BL34_ANODE_CONN — TP0418 — LCM BACKLIGHT SOURCE (3/4)

### DFU

PMU_TO_AP_FORCE_DFU — TP0414 — FORCE DFU

### E75

90_TRISTAR_DP1_CONN_P — TP0402

90_TRISTAR_DP1_CONN_N — TP0403

90_TRISTAR_DP2_CONN_P — TP0404

90_TRISTAR_DP2_CONN_N — TP0405

PP_TRISTAR_ACC1 — TP0406

PP_TRISTAR_ACC2 — TP0407

ACCESSORY ID AND POWER

TP0416 — TP IS TO HELP WITH USB SI IN THE FACTORY FIXTURE.

TRISTAR_CON_DETECT_L — TP0412 — FOR DIAGS

### AMUX

PMU_AMUX_AY — TP0413 — ANALOG MUX A OUTPUT

#25244799 100k to 200k — R0413 200K 1% 1/32W MF 01005 ROOM=SOC

PMU_AMUX_BY — TP0423 — ANALOG MUX B OUTPUT

Note: Fiducial used as test point

### MOJAVE

MESA_TO_BOOST_EN — TP0400

PP16V0_MESA — TP0401

## FIDUCIALS

FD0410 FID 0P5SM1P0SQ-NSP ROOM=ASSEMBLY

FD0409 FID 0P5SM1P0SQ-NSP ROOM=ASSEMBLY

FD0405 FID 0P5SM1P0SQ-NSP ROOM=ASSEMBLY

FD0406 FID 0P5SQ-SMP3SQ-NSP ROOM=ASSEMBLY

FD0404 FID 0P5SQ-SMP3SQ-NSP ROOM=ASSEMBLY

FD0403 FID 0P5SQ-SMP3SQ-NSP ROOM=ASSEMBLY

FD0402 FID 0P5SQ-SMP3SQ-NSP ROOM=ASSEMBLY

FD0401 FID 0P5SQ-SMP3SQ-NSP ROOM=ASSEMBLY

FD0400 FID 0P5SQ-SMP3SQ-NSP ROOM=ASSEMBLY

FD0407 FID 0P5SM1P0SQ-NSP ROOM=TEST

FD0411 FID 0P5SQ-SMP3SQ-NSP

VIETMOBILE.VN

TOP SIDE

PAGE TITLE: SYSTEM:MECHANICAL COMPONENTS

Apple Inc.

DRAWING NUMBER: 051-00482 SIZE: D

REVISION: 8.0.0

BRANCH

PAGE: 4 OF 53

SHEET: 4 OF 81

NOTICE OF PROPRIETARY PROPERTY:
THE INFORMATION CONTAINED HEREIN IS THE PROPRIETARY PROPERTY OF APPLE INC.
THE POSESSOR AGREES TO THE FOLLOWING:
I TO MAINTAIN THIS DOCUMENT IN CONFIDENCE
II NOT TO REPRODUCE OR COPY IT
III NOT TO REVEAL OR PUBLISH IT IN WHOLE OR PART
IV ALL RIGHTS RESERVED

# BOOTSTRAPPING:BOARD REV
# BOARD ID
# BOOT CONFIG

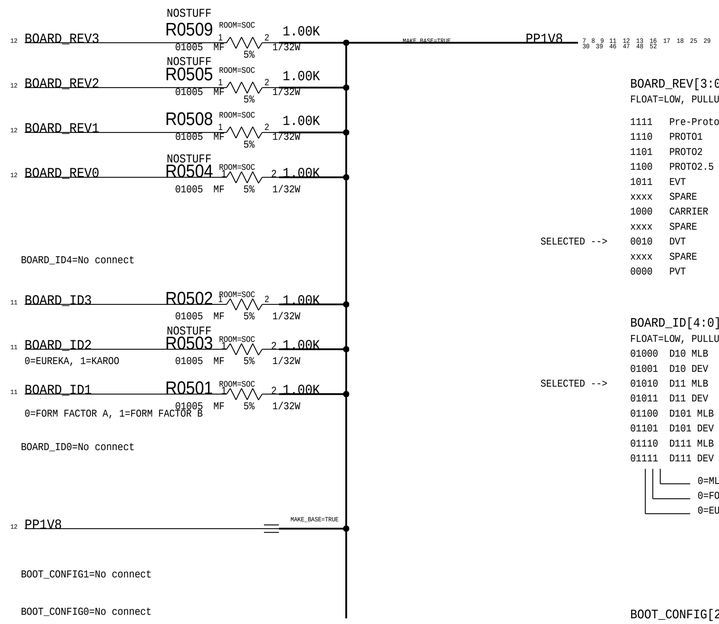


BOARD_REV[3:0]
FLOAT=LOW, PULLUP=HIGH

| | | |
|---|---|---|
| | 1111 | Pre-Proto w/D520 (non enclosure) |
| | 1110 | PROTO1 |
| | 1101 | PROTO2 |
| | 1100 | PROTO2.5 |
| | 1011 | EVT |
| | xxxx | SPARE |
| | 1000 | CARRIER |
| | xxxx | SPARE |
| SELECTED --> | 0010 | DVT |
| | xxxx | SPARE |
| | 0000 | PVT |

BOARD_ID[4:0]
FLOAT=LOW, PULLUP=HIGH

| | | |
|---|---|---|
| | 01000 | D10 MLB |
| | 01001 | D10 DEV |
| SELECTED --> | 01010 | D11 MLB |
| | 01011 | D11 DEV |
| | 01100 | D101 MLB |
| | 01101 | D101 DEV |
| | 01110 | D111 MLB |
| | 01111 | D111 DEV |

0=MLB, 1=DEV
0=FORM FACTOR A, 1=FORM FACTOR B
0=EUREKA, 1=KAROO

BOOT_CONFIG[2:0]
FLOAT=LOW, PULLUP=HIGH

| | | |
|---|---|---|
| | 000 | SPI0 |
| | 001 | SPI0 TEST MODE |
| | 010 | NVME0_X2 |
| | 011 | NVME0 X2 TEST |
| SELECTED --> | 100 | NVME0 X1 |
| | 101 | NVME0 X1 TEST |
| | 110 | SLOW SPI0 TEST |
| | 111 | FAST SPI0 TEST |

SYNC_MASTER=david-copy SYNC_DATE=03/01/2016

PAGE TITLE
SYSTEM: BOARDID

Apple Inc.

DRAWING NUMBER 051-00482
SIZE D
REVISION 8.0.0
BRANCH
PAGE 5 OF 53
SHEET 5 OF 81

NOTICE OF PROPRIETARY PROPERTY:
THE INFORMATION CONTAINED HEREIN IS THE PROPRIETARY PROPERTY OF APPLE INC.
THE POSESSOR AGREES TO THE FOLLOWING:
I TO MAINTAIN THIS DOCUMENT IN CONFIDENCE
II NOT TO REPRODUCE OR COPY IT
III NOT TO REVEAL OR PUBLISH IT IN WHOLE OR PART
IV ALL RIGHTS RESERVED

PAGE TITLE

spare

Apple Inc.

| | |
|---|---|
| DRAWING NUMBER | 051-00482 |
| SIZE | D |
| REVISION | 8.0.0 |
| BRANCH | |
| PAGE | 6 OF 53 |
| SHEET | 6 OF 81 |

NOTICE OF PROPRIETARY PROPERTY:

THE INFORMATION CONTAINED HEREIN IS THE PROPRIETARY PROPERTY OF APPLE INC.
THE POSESSOR AGREES TO THE FOLLOWING:

I TO MAINTAIN THIS DOCUMENT IN CONFIDENCE

II NOT TO REPRODUCE OR COPY IT

III NOT TO REVEAL OR PUBLISH IT IN WHOLE OR PART

IV ALL RIGHTS RESERVED

# SOC - USB, JTAG, XTAL

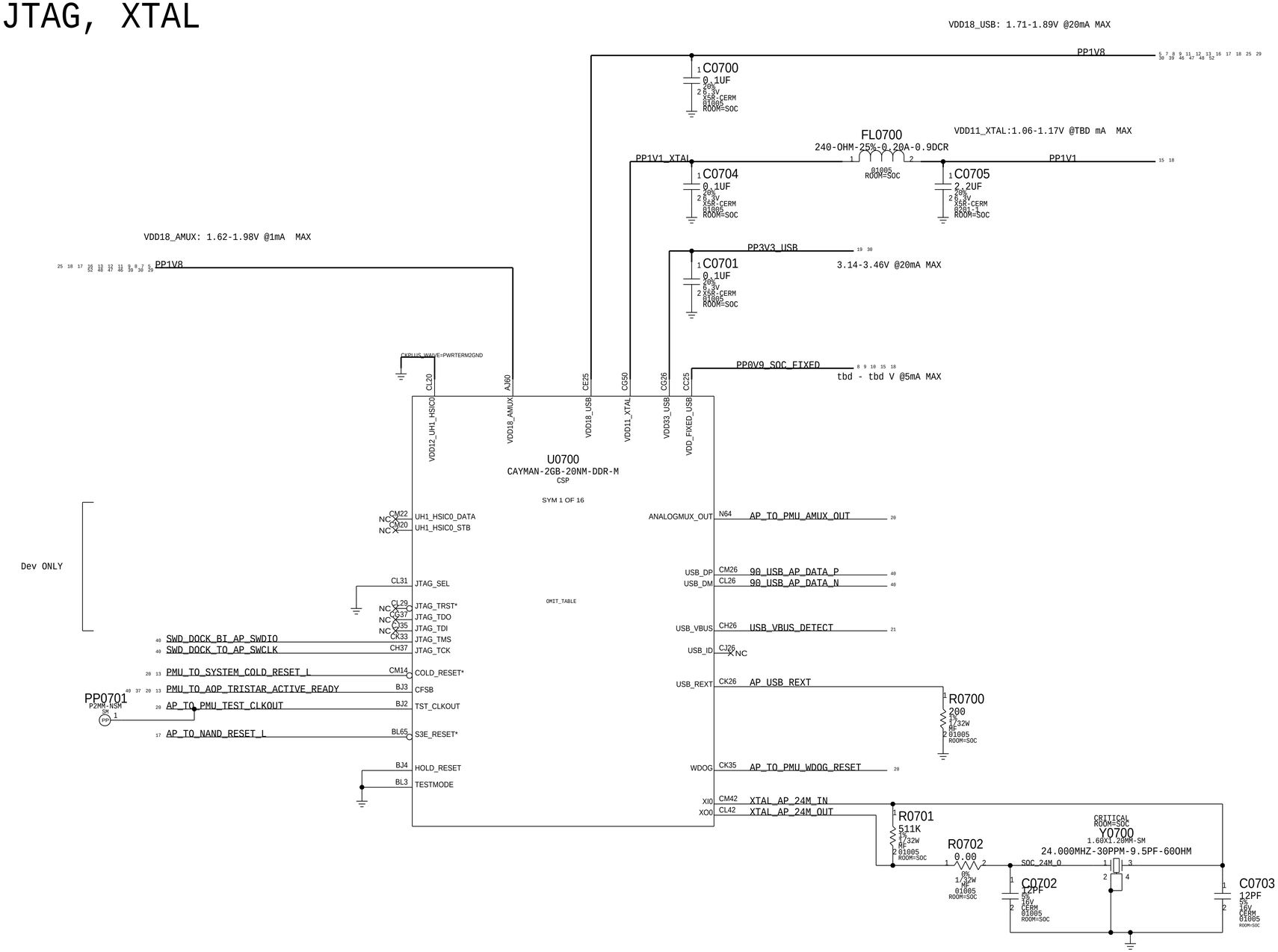


| | |
|---|---|
| PAGE TITLE | SOC:JTAG,USB,XTAL |
| Apple Inc. | DRAWING NUMBER 051-00482 SIZE D |
| | REVISION 8.0.0 |
| | BRANCH |
| | PAGE 7 OF 53 |
| | SHEET 7 OF 81 |


NOTICE OF PROPRIETARY PROPERTY:
THE INFORMATION CONTAINED HEREIN IS THE PROPRIETARY PROPERTY OF APPLE INC.
THE POSESSOR AGREES TO THE FOLLOWING:
I TO MAINTAIN THIS DOCUMENT IN CONFIDENCE
II NOT TO REPRODUCE OR COPY IT
III NOT TO REVEAL OR PUBLISH IT IN WHOLE OR PART
IV ALL RIGHTS RESERVED

# SOC - PCIE INTERFACES

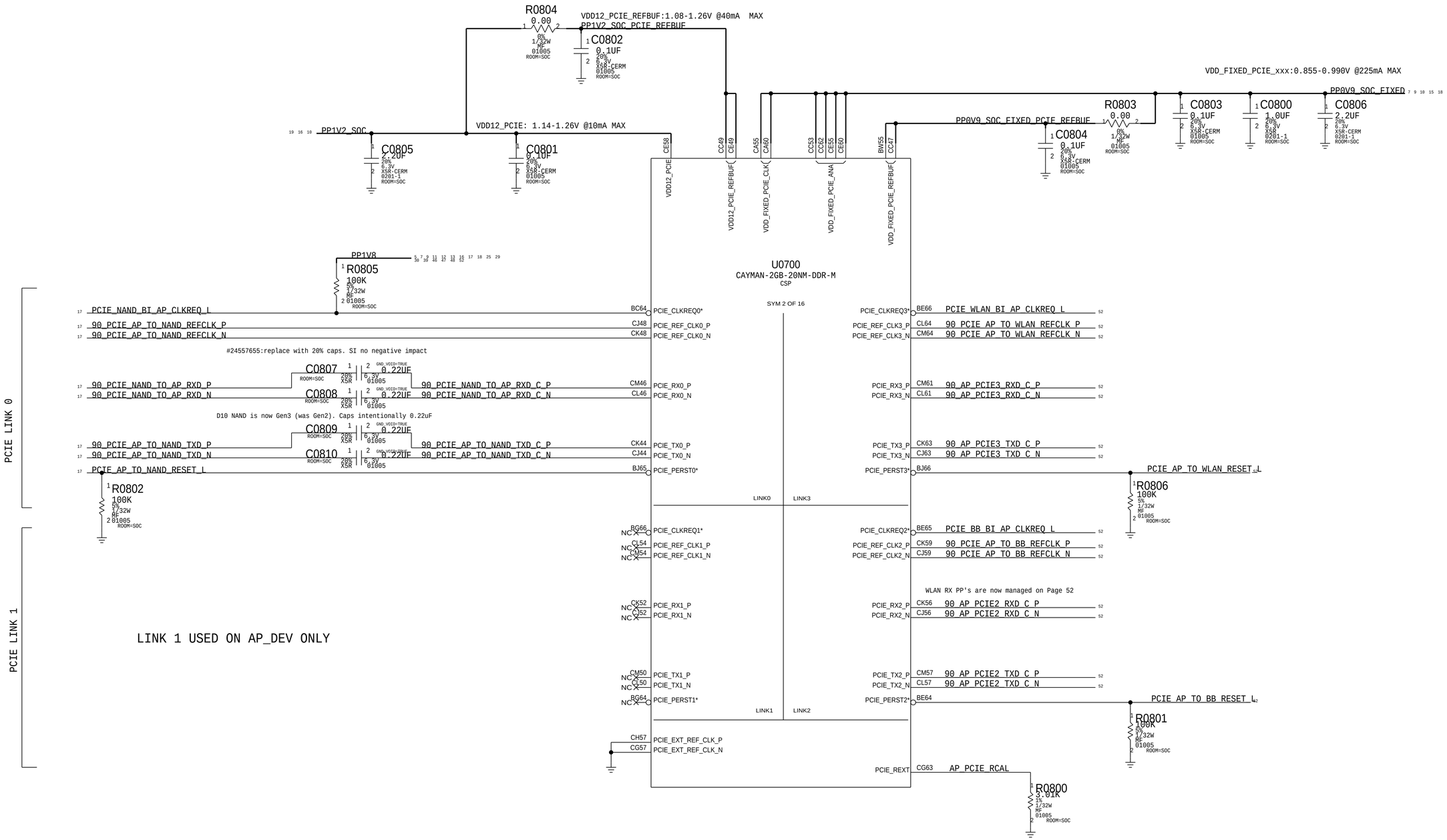


| | |
|---|---|
| PAGE TITLE | SOC:PCIE |
| Apple Inc. | DRAWING NUMBER 051-00482 SIZE D |
| | REVISION 8.0.0 |
| | BRANCH |
| | PAGE 8 OF 53 |
| | SHEET 8 OF 81 |


NOTICE OF PROPRIETARY PROPERTY:
THE INFORMATION CONTAINED HEREIN IS THE PROPRIETARY PROPERTY OF APPLE INC.
THE POSESSOR AGREES TO THE FOLLOWING:
I TO MAINTAIN THIS DOCUMENT IN CONFIDENCE
II NOT TO REPRODUCE OR COPY IT
III NOT TO REVEAL OR PUBLISH IT IN WHOLE OR PART
IV ALL RIGHTS RESERVED

# SOC - MIPI & ISP INTERFACES

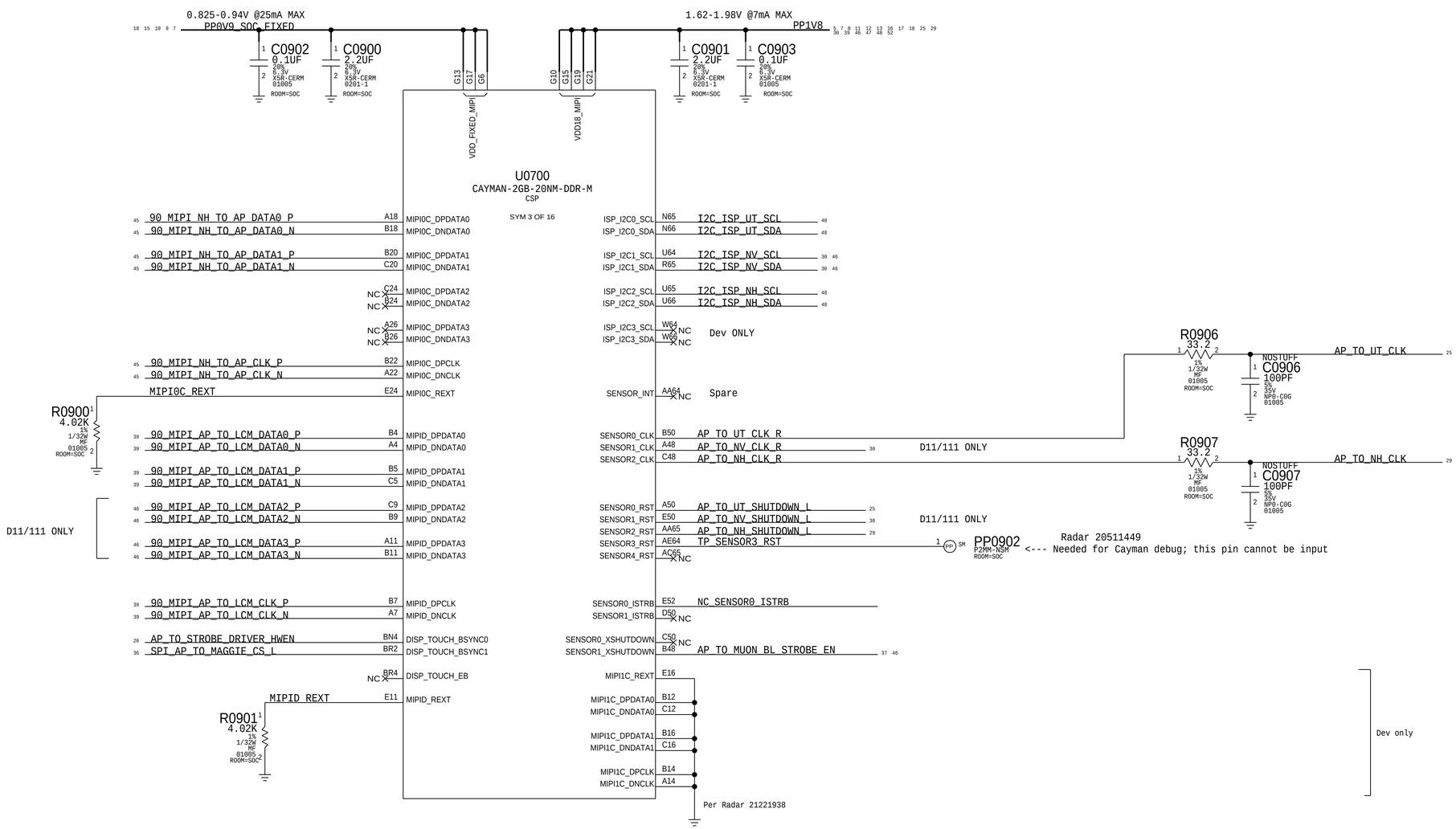


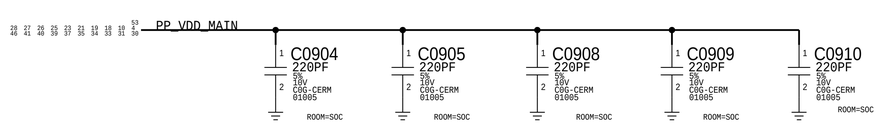


PAGE TITLE

SOC:MIPI AND ISP

Apple Inc.

DRAWING NUMBER 051-00482 SIZE D

REVISION 8.0.0

BRANCH

PAGE 9 OF 53

SHEET 9 OF 81

NOTICE OF PROPRIETARY PROPERTY:
THE INFORMATION CONTAINED HEREIN IS THE PROPRIETARY PROPERTY OF APPLE INC.
THE POSESSOR AGREES TO THE FOLLOWING:
I TO MAINTAIN THIS DOCUMENT IN CONFIDENCE
II NOT TO REPRODUCE OR COPY IT
III NOT TO REVEAL OR PUBLISH IT IN WHOLE OR PART
IV ALL RIGHTS RESERVED

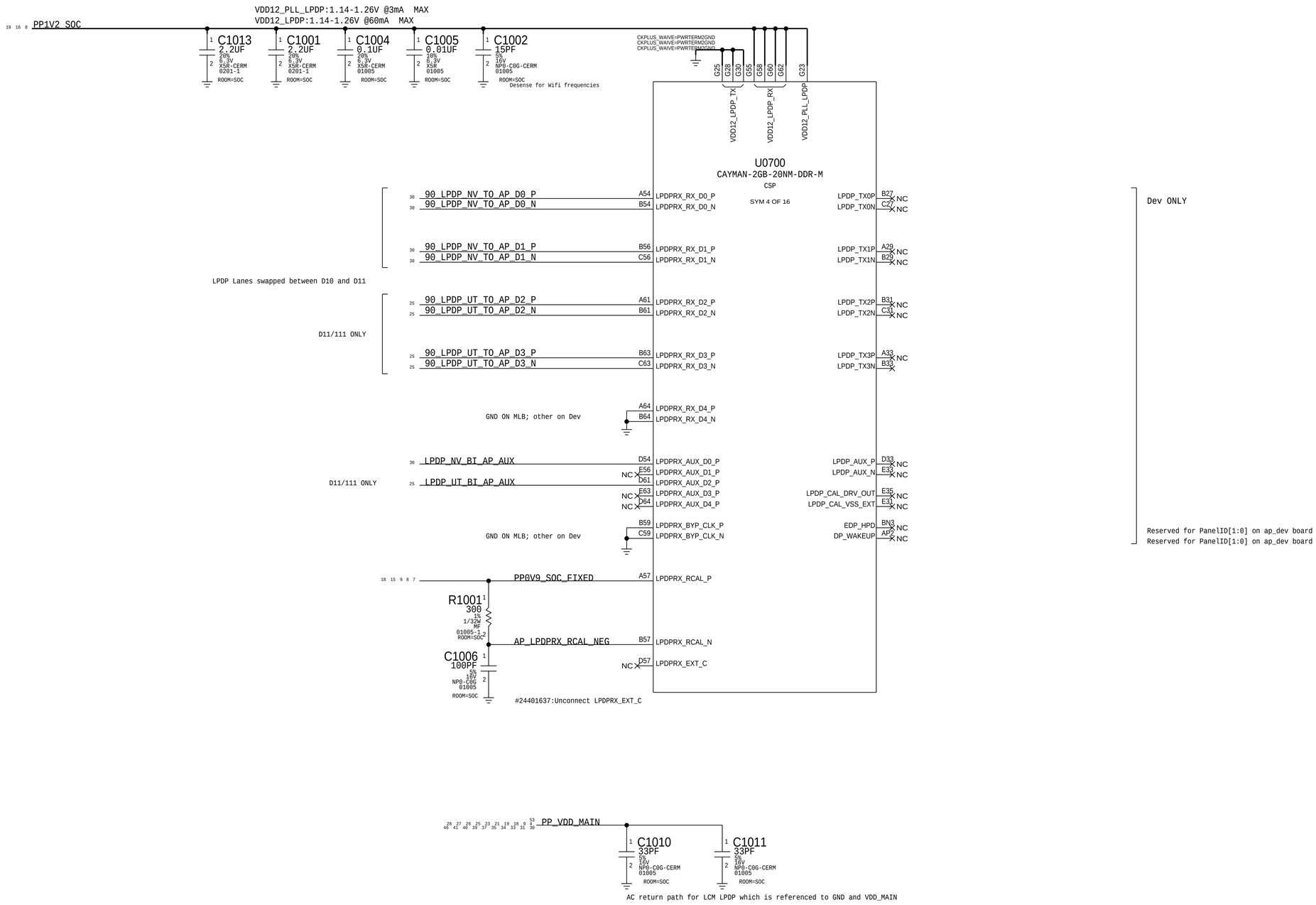


PAGE TITLE

# SOC:LPDP

Apple Inc.

DRAWING NUMBER 051-00482 SIZE D

REVISION 8.0.0

BRANCH

PAGE 10 OF 53

SHEET 10 OF 81

NOTICE OF PROPRIETARY PROPERTY:

THE INFORMATION CONTAINED HEREIN IS THE PROPRIETARY PROPERTY OF APPLE INC.
THE POSESSOR AGREES TO THE FOLLOWING:
I TO MAINTAIN THIS DOCUMENT IN CONFIDENCE
II NOT TO REPRODUCE OR COPY IT
III NOT TO REVEAL OR PUBLISH IT IN WHOLE OR PART
IV ALL RIGHTS RESERVED

# SOC - SERIAL INTERFACES

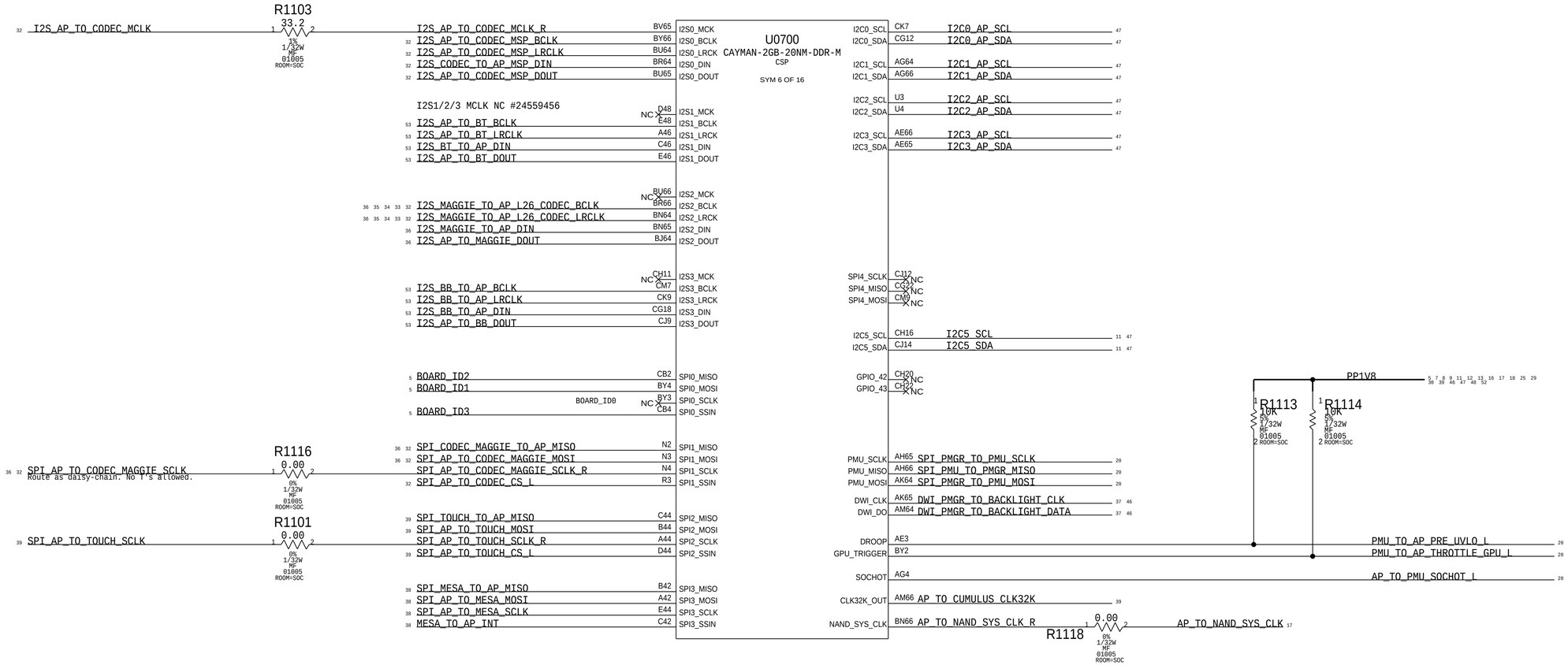


## I2C5

See Radar#25316444 for Details

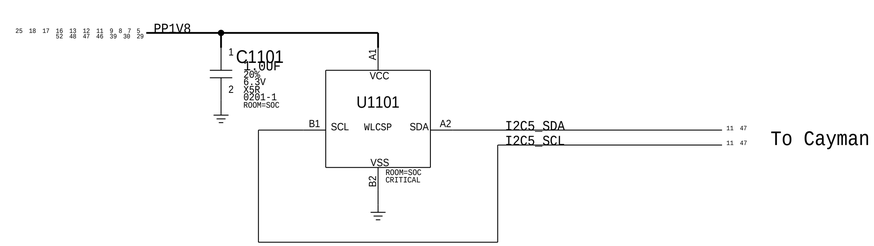


| | |
|---|---|
| PAGE TITLE | SOC:SERIAL |
| Apple Inc. | DRAWING NUMBER 051-00482 SIZE D |
| | REVISION 8.0.0 |
| | BRANCH |
| | PAGE 11 OF 53 |
| | SHEET 11 OF 81 |

NOTICE OF PROPRIETARY PROPERTY:
THE INFORMATION CONTAINED HEREIN IS THE PROPRIETARY PROPERTY OF APPLE INC.
THE POSESSOR AGREES TO THE FOLLOWING:
I TO MAINTAIN THIS DOCUMENT IN CONFIDENCE
II NOT TO REPRODUCE OR COPY IT
III NOT TO REVEAL OR PUBLISH IT IN WHOLE OR PART
IV ALL RIGHTS RESERVED

# SOC - GPIO INTERFACES

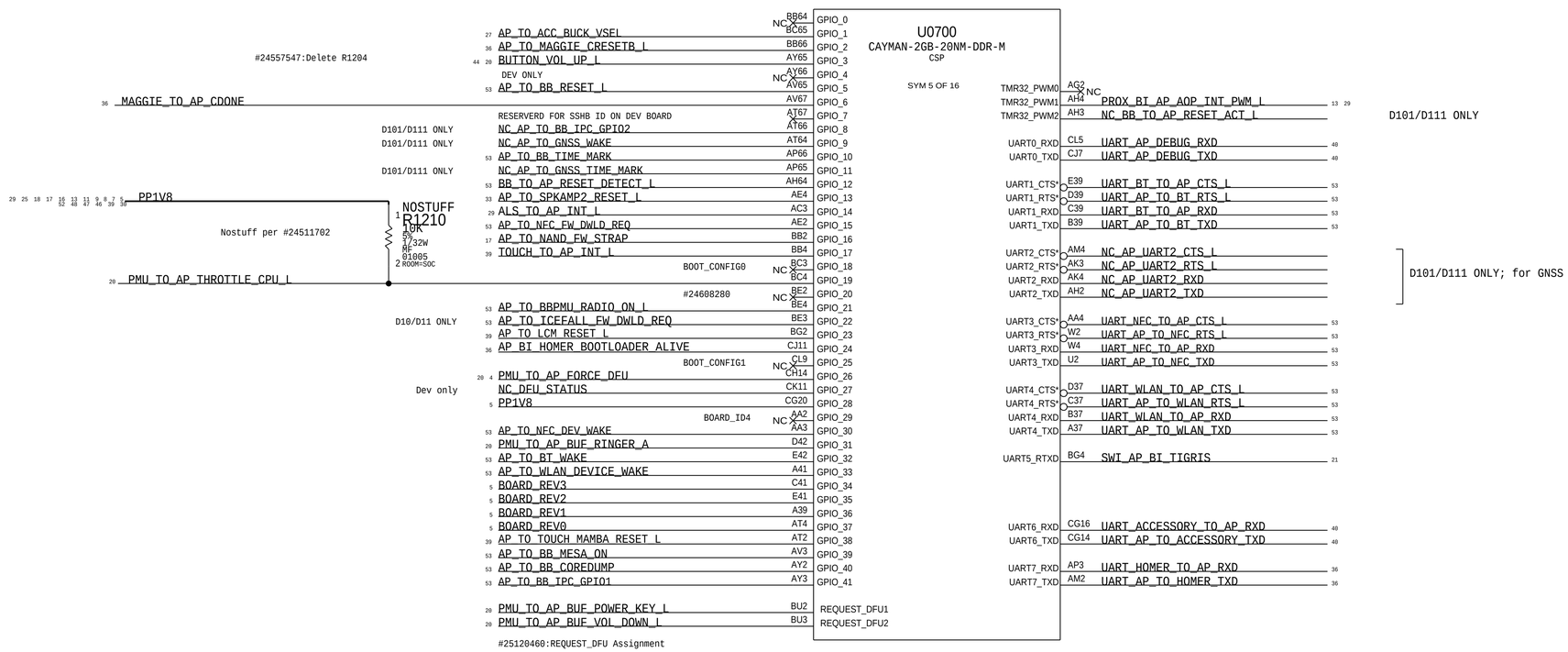


PAGE TITLE

SOC:GPIO & UART

Apple Inc.

DRAWING NUMBER 051-00482

SIZE D

REVISION 8.0.0

BRANCH

PAGE 12 OF 53

SHEET 12 OF 81

NOTICE OF PROPRIETARY PROPERTY:

THE INFORMATION CONTAINED HEREIN IS THE PROPRIETARY PROPERTY OF APPLE INC.
THE POSESSOR AGREES TO THE FOLLOWING:
I TO MAINTAIN THIS DOCUMENT IN CONFIDENCE
II NOT TO REPRODUCE OR COPY IT
III NOT TO REVEAL OR PUBLISH IT IN WHOLE OR PART
IV ALL RIGHTS RESERVED

# SOC - AOP

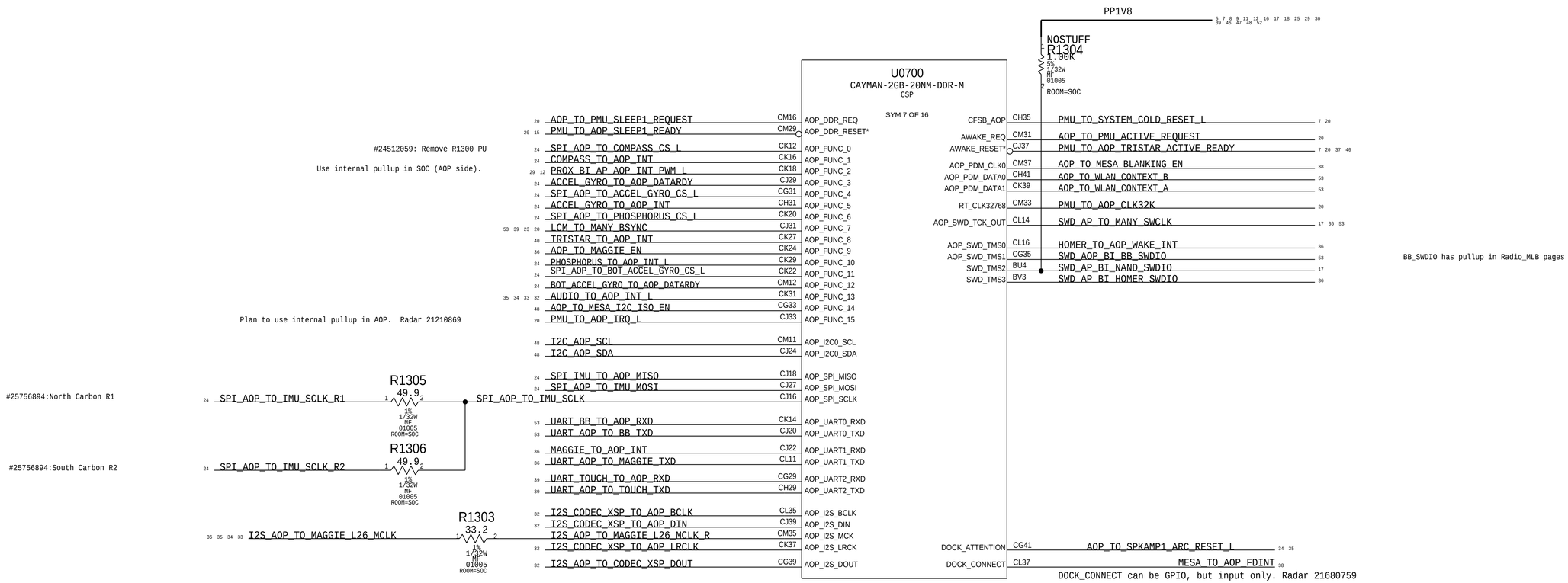


| | |
|---|---|
| PAGE TITLE | SOC:AOP |
| Apple Inc. | DRAWING NUMBER 051-00482 SIZE D |
| | REVISION 8.0.0 |
| | BRANCH |
| | PAGE 13 OF 53 |
| | SHEET 13 OF 81 |

NOTICE OF PROPRIETARY PROPERTY:
THE INFORMATION CONTAINED HEREIN IS THE PROPRIETARY PROPERTY OF APPLE INC.
THE POSESSOR AGREES TO THE FOLLOWING:
I TO MAINTAIN THIS DOCUMENT IN CONFIDENCE
II NOT TO REPRODUCE OR COPY IT
III NOT TO REVEAL OR PUBLISH IT IN WHOLE OR PART
IV ALL RIGHTS RESERVED

# SOC - CPU, GPU & SOC RAILS

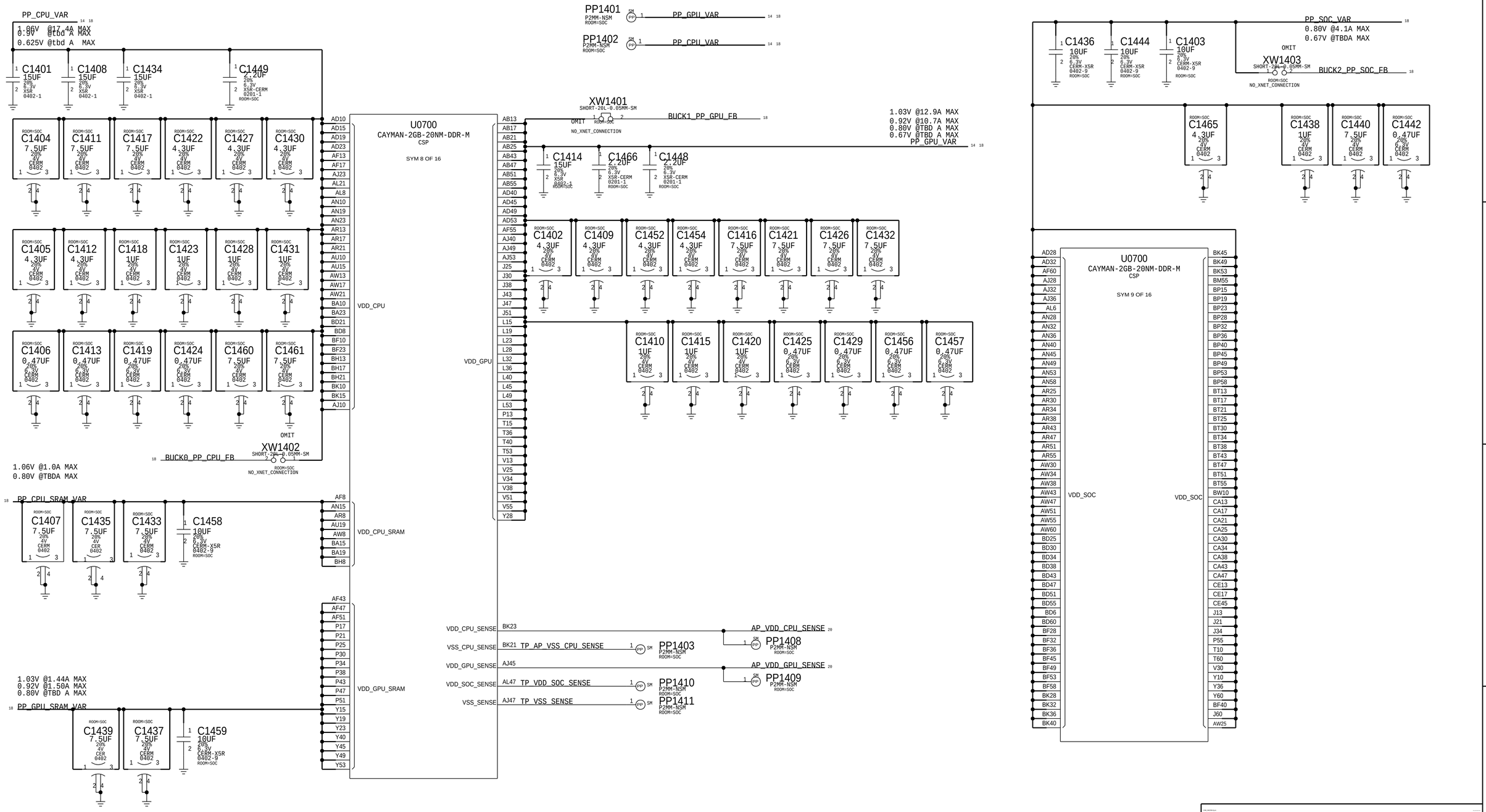


PAGE TITLE

SOC:POWER (1/3)

Apple Inc.

DRAWING NUMBER 051-00482 SIZE D

REVISION 8.0.0

BRANCH

PAGE 14 OF 53

SHEET 14 OF 81


NOTICE OF PROPRIETARY PROPERTY:

THE INFORMATION CONTAINED HEREIN IS THE PROPRIETARY PROPERTY OF APPLE INC.
THE POSESSOR AGREES TO THE FOLLOWING:
I TO MAINTAIN THIS DOCUMENT IN CONFIDENCE
II NOT TO REPRODUCE OR COPY IT
III NOT TO REVEAL OR PUBLISH IT IN WHOLE OR PART
IV ALL RIGHTS RESERVED

# SOC - POWER SUPPLIES

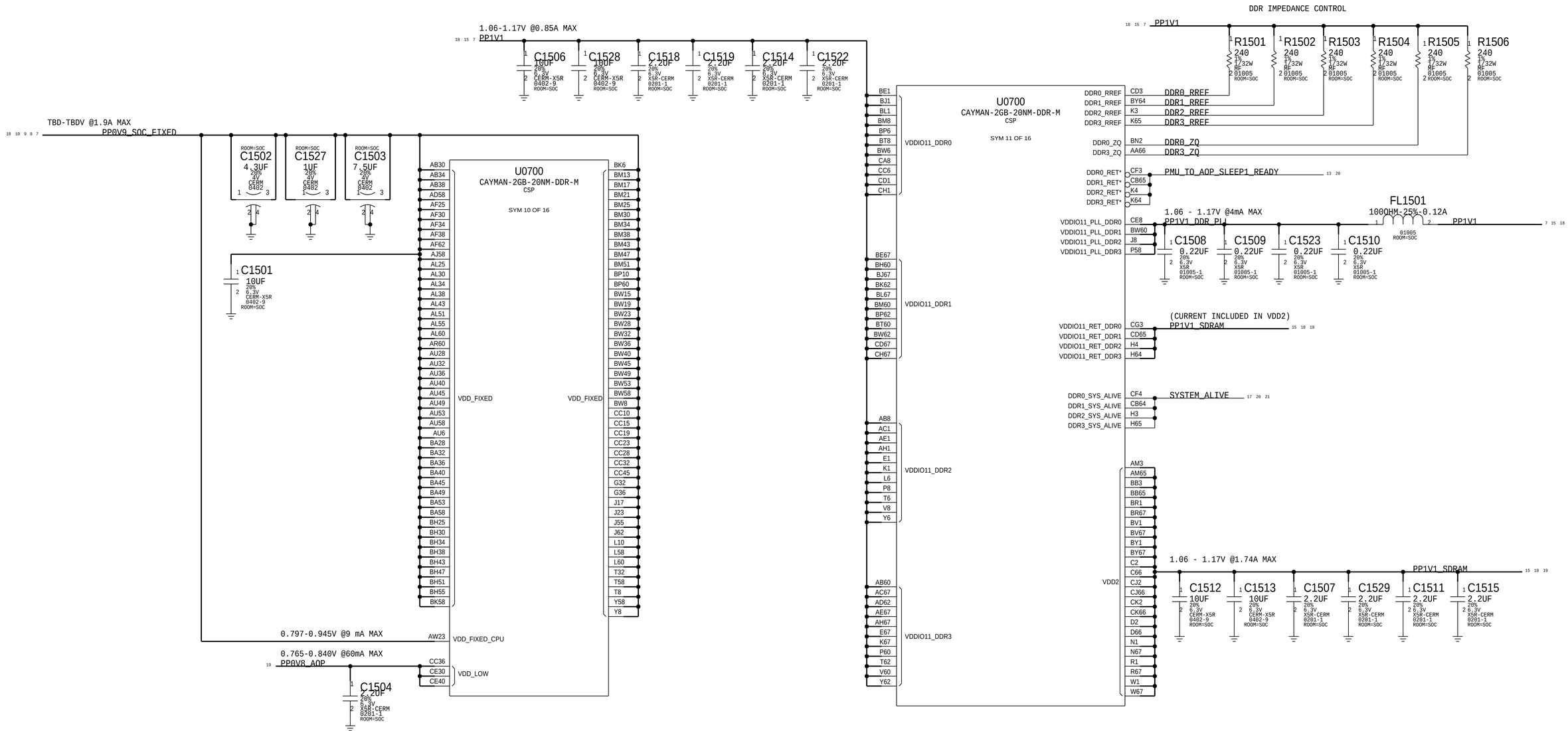


PAGE TITLE
SOC:POWER (2/3)

Apple Inc.

DRAWING NUMBER 051-00482 SIZE D
REVISION 8.0.0
BRANCH
PAGE 15 OF 53
SHEET 15 OF 81

NOTICE OF PROPRIETARY PROPERTY:
THE INFORMATION CONTAINED HEREIN IS THE PROPRIETARY PROPERTY OF APPLE INC.
THE POSESSOR AGREES TO THE FOLLOWING:
I TO MAINTAIN THIS DOCUMENT IN CONFIDENCE
II NOT TO REPRODUCE OR COPY IT
III NOT TO REVEAL OR PUBLISH IT IN WHOLE OR PART
IV ALL RIGHTS RESERVED

# SOC - POWER SUPPLIES

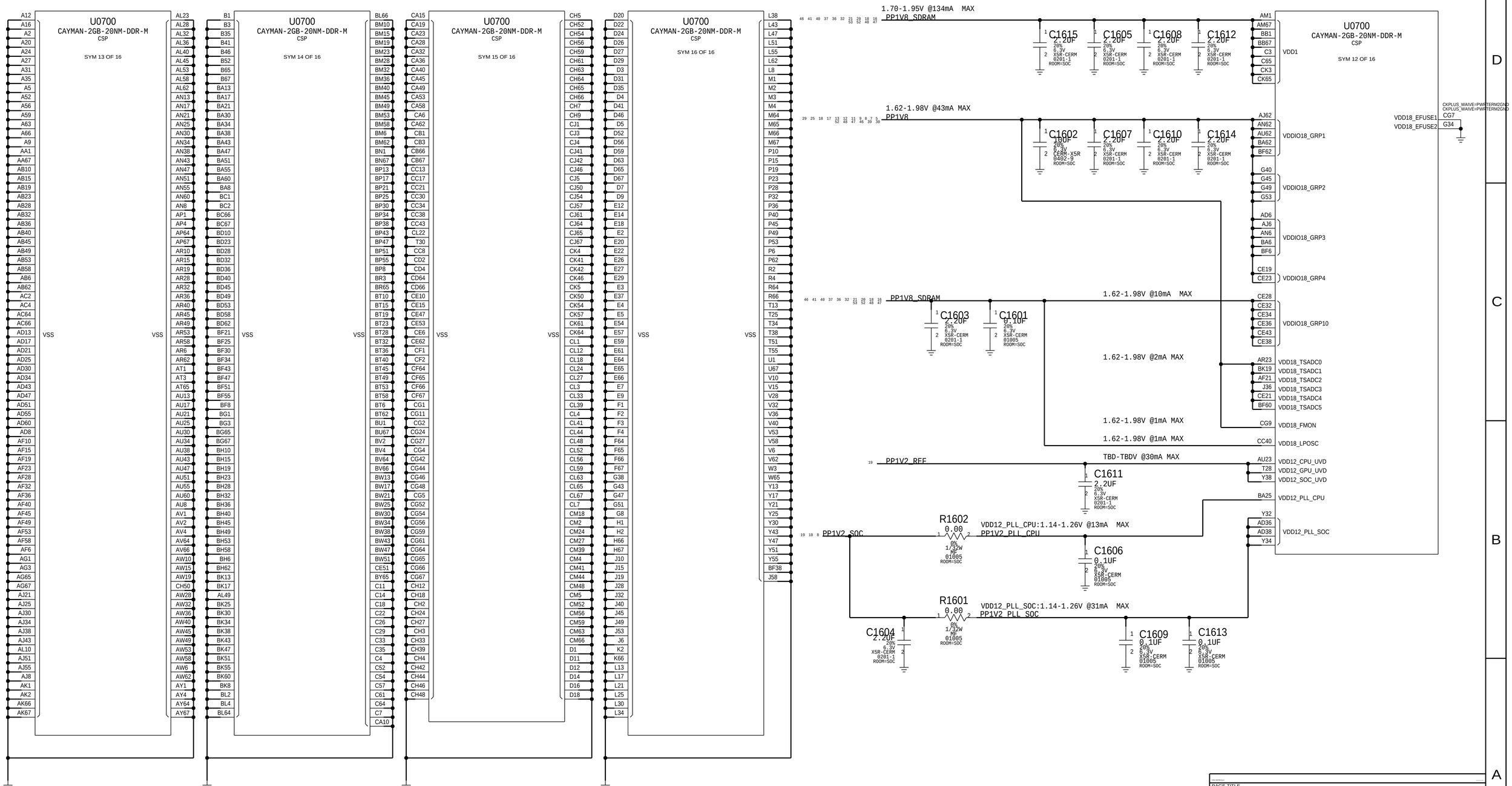


PAGE TITLE

SOC:POWER (3/3)

Apple Inc.

DRAWING NUMBER 051-00482 SIZE D

REVISION 8.0.0

BRANCH

PAGE 16 OF 53

SHEET 16 OF 81


NOTICE OF PROPRIETARY PROPERTY:

THE INFORMATION CONTAINED HEREIN IS THE PROPRIETARY PROPERTY OF APPLE INC.
THE POSESSOR AGREES TO THE FOLLOWING:
I TO MAINTAIN THIS DOCUMENT IN CONFIDENCE
II NOT TO REPRODUCE OR COPY IT
III NOT TO REVEAL OR PUBLISH IT IN WHOLE OR PART
IV ALL RIGHTS RESERVED

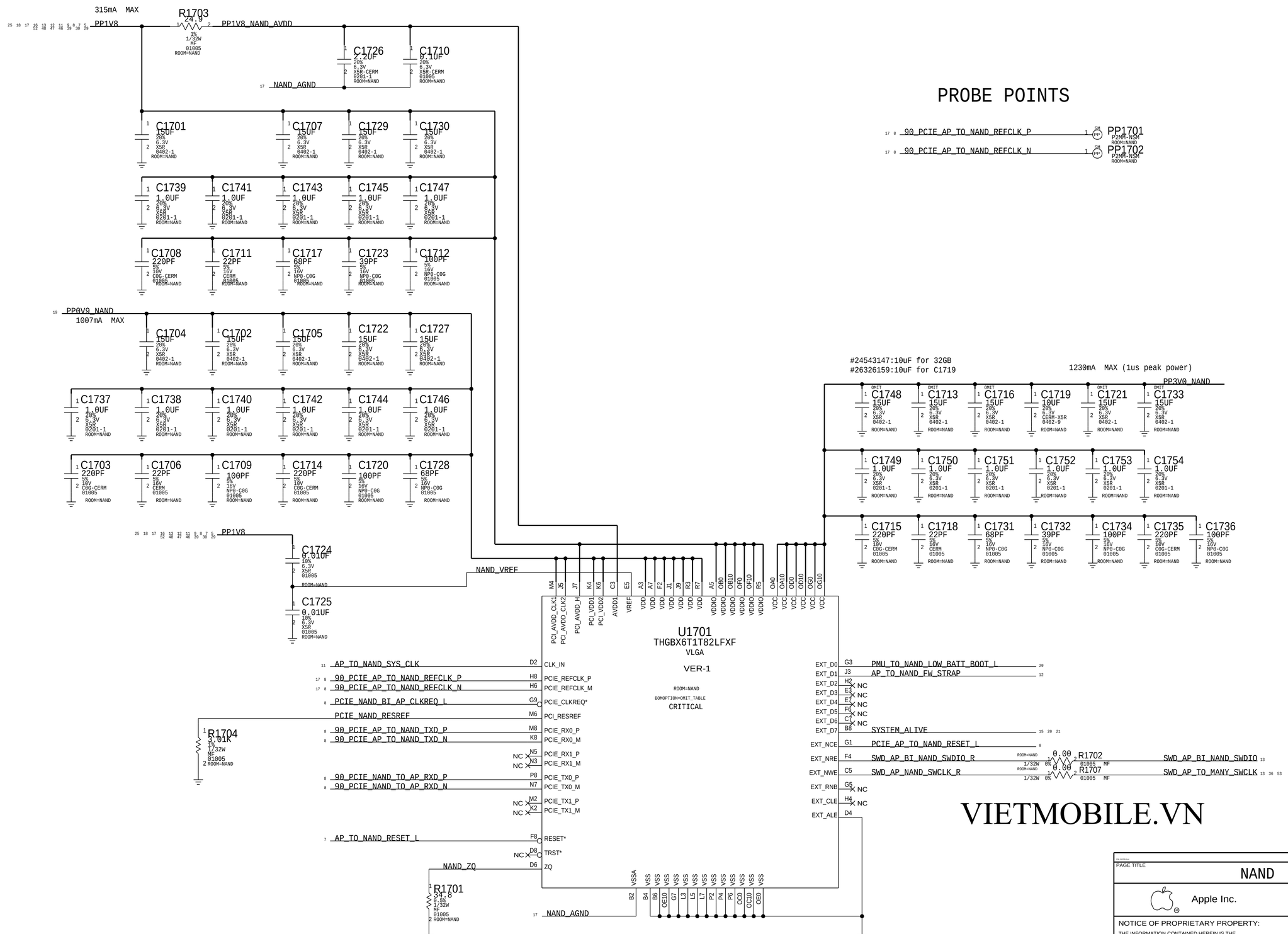


VIETMOBILE.VN

PAGE TITLE
NAND

Apple Inc.

DRAWING NUMBER 051-00482
SIZE D
REVISION 8.0.0
BRANCH
PAGE 17 OF 53
SHEET 17 OF 81

NOTICE OF PROPRIETARY PROPERTY:
THE INFORMATION CONTAINED HEREIN IS THE PROPRIETARY PROPERTY OF APPLE INC.
THE POSESSOR AGREES TO THE FOLLOWING:
I TO MAINTAIN THIS DOCUMENT IN CONFIDENCE
II NOT TO REPRODUCE OR COPY IT
III NOT TO REVEAL OR PUBLISH IT IN WHOLE OR PART
IV ALL RIGHTS RESERVED

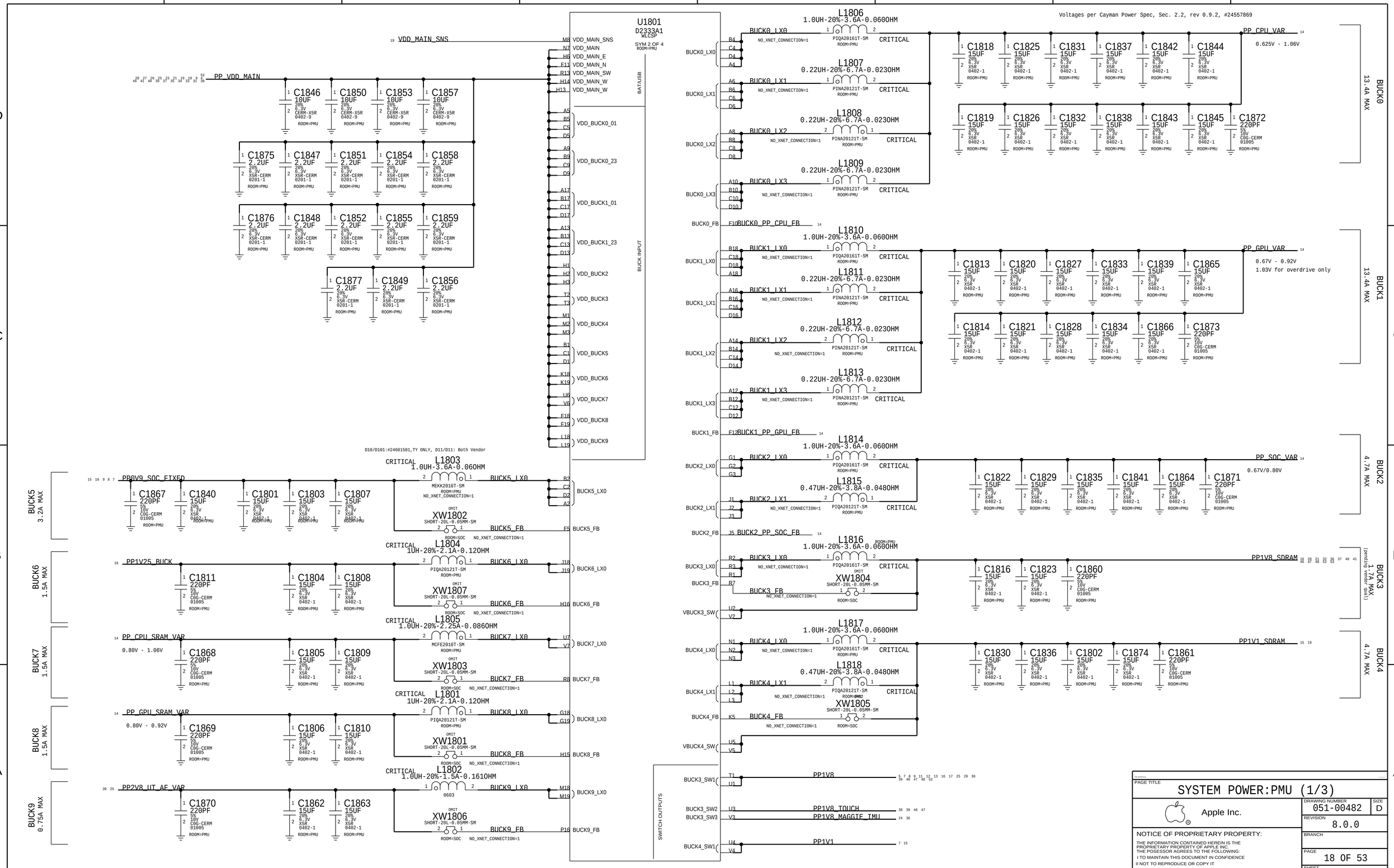
U1801
D2333A1
WLCSP
SYM 2 OF 4
ROOM=PMU
BAT/USB
BUCK INPUT
SWITCH OUTPUTS
VDD_MAIN_SNS
PP_VDD_MAIN
VDD_MAIN
VDD_MAIN_E
VDD_MAIN_N
VDD_MAIN_SW
VDD_MAIN_W
VDD_BUCK0_01
VDD_BUCK0_23
VDD_BUCK1_01
VDD_BUCK1_23
VDD_BUCK2
VDD_BUCK3
VDD_BUCK4
VDD_BUCK5
VDD_BUCK6
VDD_BUCK7
VDD_BUCK8
VDD_BUCK9
Voltages per Cayman Power Spec, Sec. 2.2, rev 0.9.2, #24557869
BUCK0
13.4A MAX
PP_CPU_VAR
0.625V - 1.06V
BUCK0_LX0
BUCK0_LX1
BUCK0_LX2
BUCK0_LX3
BUCK0_FB
BUCK0_PP_CPU_FB
BUCK1
13.4A MAX
PP_GPU_VAR
0.67V - 0.92V
1.03V for overdrive only
BUCK1_LX0
BUCK1_LX1
BUCK1_LX2
BUCK1_LX3
BUCK1_FB
BUCK1_PP_GPU_FB
BUCK2
4.7A MAX
PP_SOC_VAR
0.67V/0.80V
BUCK2_LX0
BUCK2_LX1
BUCK2_FB
BUCK2_PP_SOC_FB
BUCK3
1.7A MAX
(pending vendor qual)
PP1V8_SDRAM
BUCK3_LX0
BUCK3_FB
VBUCK3_SW
BUCK4
4.7A MAX
PP1V1_SDRAM
BUCK4_LX0
BUCK4_LX1
BUCK4_FB
VBUCK4_SW
BUCK5
3.2A MAX
PP0V9_SOC_FIXED
BUCK5_LX0
BUCK5_FB
BUCK6
1.5A MAX
PP1V25_BUCK
BUCK6_LX0
BUCK6_FB
BUCK7
1.5A MAX
PP_CPU_SRAM_VAR
0.80V - 1.06V
BUCK7_LX0
BUCK7_FB
BUCK8
1.5A MAX
PP_GPU_SRAM_VAR
0.80V - 0.92V
BUCK8_LX0
BUCK8_FB
BUCK9
0.75A MAX
PP2V8_UT_AF_VAR
BUCK9_LX0
BUCK9_FB
BUCK3_SW1
PP1V8
BUCK3_SW2
PP1V8_TOUCH
BUCK3_SW3
PP1V8_MAGGIE_TMU
BUCK4_SW1
PP1V1
D10/D101:#24681501,TY ONLY, D11/D11: Both Vendor
PAGE TITLE
SYSTEM POWER:PMU (1/3)
Apple Inc.
DRAWING NUMBER
051-00482
SIZE
D
REVISION
8.0.0
BRANCH
PAGE
18 OF 53
SHEET
18 OF 81
NOTICE OF PROPRIETARY PROPERTY:
THE INFORMATION CONTAINED HEREIN IS THE PROPRIETARY PROPERTY OF APPLE INC.
THE POSESSOR AGREES TO THE FOLLOWING:
I TO MAINTAIN THIS DOCUMENT IN CONFIDENCE
II NOT TO REPRODUCE OR COPY IT
III NOT TO REVEAL OR PUBLISH IT IN WHOLE OR PART
IV ALL RIGHTS RESERVED

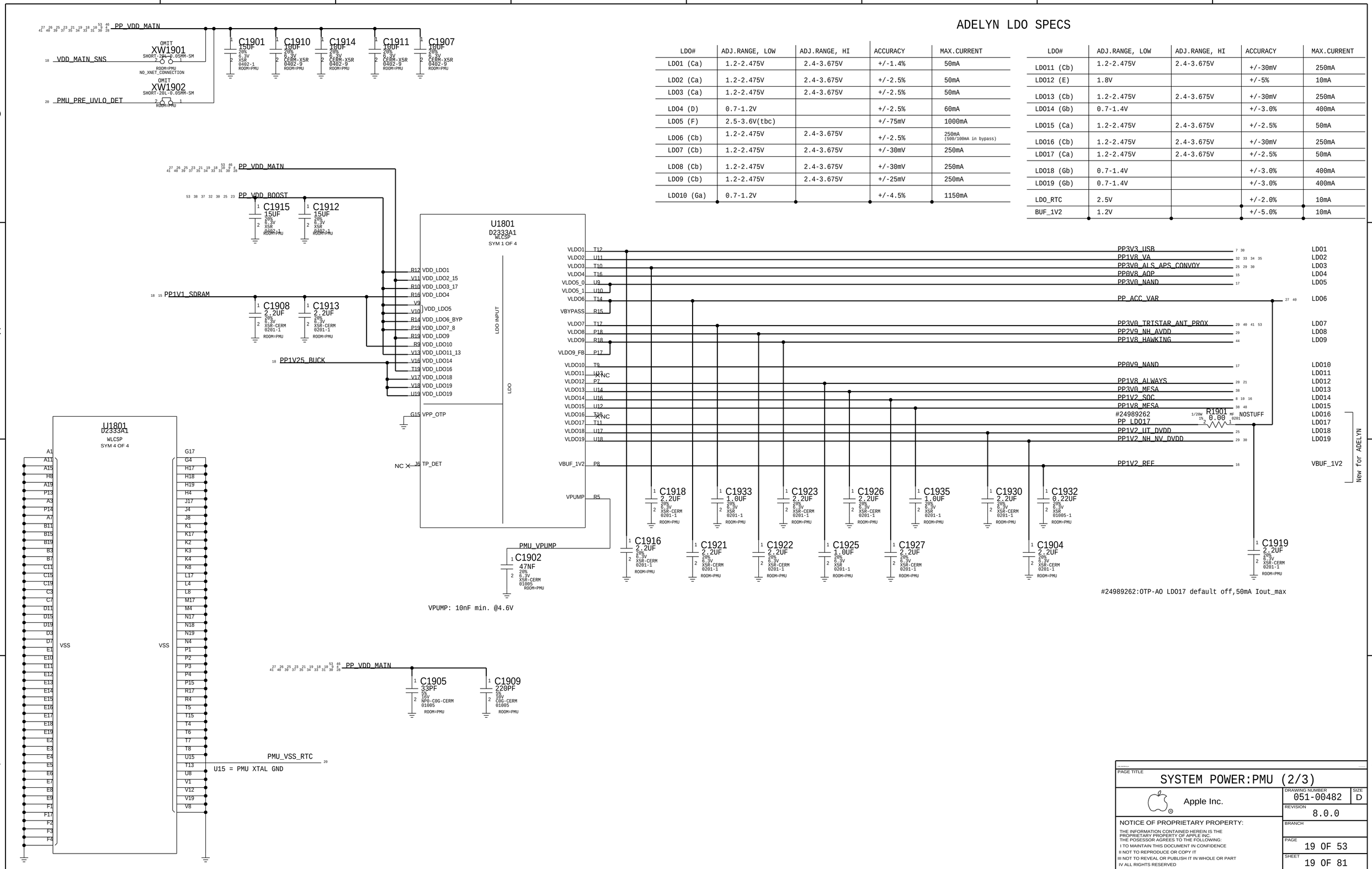


## ADELYN LDO SPECS

| LDO# | ADJ.RANGE, LOW | ADJ.RANGE, HI | ACCURACY | MAX.CURRENT |
|---|---|---|---|---|
| LDO1 (Ca) | 1.2-2.475V | 2.4-3.675V | +/-1.4% | 50mA |
| LDO2 (Ca) | 1.2-2.475V | 2.4-3.675V | +/-2.5% | 50mA |
| LDO3 (Ca) | 1.2-2.475V | 2.4-3.675V | +/-2.5% | 50mA |
| LDO4 (D) | 0.7-1.2V | | +/-2.5% | 60mA |
| LDO5 (F) | 2.5-3.6V(tbc) | | +/-75mV | 1000mA |
| LDO6 (Cb) | 1.2-2.475V | 2.4-3.675V | +/-2.5% | 250mA (500/100mA in bypass) |
| LDO7 (Cb) | 1.2-2.475V | 2.4-3.675V | +/-30mV | 250mA |
| LDO8 (Cb) | 1.2-2.475V | 2.4-3.675V | +/-30mV | 250mA |
| LDO9 (Cb) | 1.2-2.475V | 2.4-3.675V | +/-25mV | 250mA |
| LDO10 (Ga) | 0.7-1.2V | | +/-4.5% | 1150mA |

| LDO# | ADJ.RANGE, LOW | ADJ.RANGE, HI | ACCURACY | MAX.CURRENT |
|---|---|---|---|---|
| LDO11 (Cb) | 1.2-2.475V | 2.4-3.675V | +/-30mV | 250mA |
| LDO12 (E) | 1.8V | | +/-5% | 10mA |
| LDO13 (Cb) | 1.2-2.475V | 2.4-3.675V | +/-30mV | 250mA |
| LDO14 (Gb) | 0.7-1.4V | | +/-3.0% | 400mA |
| LDO15 (Ca) | 1.2-2.475V | 2.4-3.675V | +/-2.5% | 50mA |
| LDO16 (Cb) | 1.2-2.475V | 2.4-3.675V | +/-30mV | 250mA |
| LDO17 (Ca) | 1.2-2.475V | 2.4-3.675V | +/-2.5% | 50mA |
| LDO18 (Gb) | 0.7-1.4V | | +/-3.0% | 400mA |
| LDO19 (Gb) | 0.7-1.4V | | +/-3.0% | 400mA |
| LDO_RTC | 2.5V | | +/-2.0% | 10mA |
| BUF_1V2 | 1.2V | | +/-5.0% | 10mA |

PAGE TITLE
SYSTEM POWER:PMU (2/3)

Apple Inc.

DRAWING NUMBER 051-00482
SIZE D
REVISION 8.0.0
BRANCH
PAGE 19 OF 53
SHEET 19 OF 81

NOTICE OF PROPRIETARY PROPERTY:
THE INFORMATION CONTAINED HEREIN IS THE PROPRIETARY PROPERTY OF APPLE INC.
THE POSESSOR AGREES TO THE FOLLOWING:
I TO MAINTAIN THIS DOCUMENT IN CONFIDENCE
II NOT TO REPRODUCE OR COPY IT
III NOT TO REVEAL OR PUBLISH IT IN WHOLE OR PART
IV ALL RIGHTS RESERVED

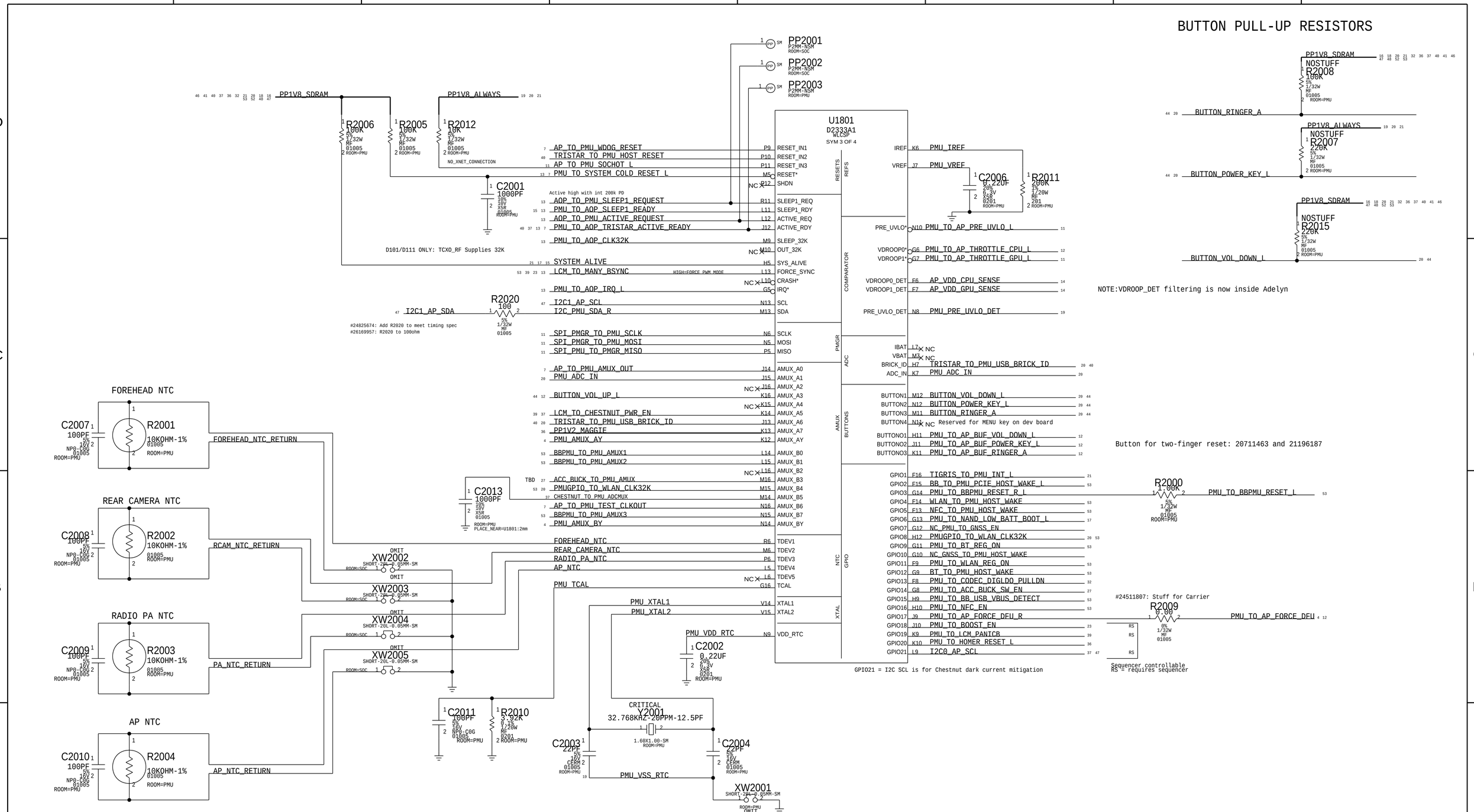
BUTTON PULL-UP RESISTORS
PP1V8_SDRAM
PP1V8_ALWAYS
R2006 100K 5% 1/32W MF 01005 ROOM=PMU
R2005 100K 5% 1/32W MF 01005 ROOM=PMU
R2012 10K 5% 1/32W MF 01005 ROOM=PMU
NO_XNET_CONNECTION
C2001 1000PF 10% 16V X5R 01005 ROOM=PMU
PP2001 P2MM-NSM ROOM=SOC
PP2002 P2MM-NSM ROOM=SOC
PP2003 P2MM-NSM ROOM=PMU
U1801
D2333A1
WLCSP
SYM 3 OF 4
AP_TO_PMU_WDOG_RESET
TRISTAR_TO_PMU_HOST_RESET
AP_TO_PMU_SOCHOT_L
PMU_TO_SYSTEM_COLD_RESET_L
Active high with int 200k PD
AOP_TO_PMU_SLEEP1_REQUEST
PMU_TO_AOP_SLEEP1_READY
AOP_TO_PMU_ACTIVE_REQUEST
PMU_TO_AOP_TRISTAR_ACTIVE_READY
PMU_TO_AOP_CLK32K
D101/D111 ONLY: TCXO_RF Supplies 32K
SYSTEM_ALIVE
LCM_TO_MANY_BSYNC
HIGH=FORCE PWM MODE
PMU_TO_AOP_IRQ_L
I2C1_AP_SCL
I2C1_AP_SDA
I2C_PMU_SDA_R
R2020 100 5% 1/32W MF 01005
#24825674: Add R2020 to meet timing spec
#26169957: R2020 to 100ohm
SPI_PMGR_TO_PMU_SCLK
SPI_PMGR_TO_PMU_MOSI
SPI_PMU_TO_PMGR_MISO
AP_TO_PMU_AMUX_OUT
PMU_ADC_IN
BUTTON_VOL_UP_L
LCM_TO_CHESTNUT_PWR_EN
TRISTAR_TO_PMU_USB_BRICK_ID
PP1V2_MAGGIF
PMU_AMUX_AY
BBPMU_TO_PMU_AMUX1
BBPMU_TO_PMU_AMUX2
ACC_BUCK_TO_PMU_AMUX
PMUGPIO_TO_WLAN_CLK32K
CHESTNUT_TO_PMU_ADCMUX
AP_TO_PMU_TEST_CLKOUT
BBPMU_TO_PMU_AMUX3
PMU_AMUX_BY
C2013 1000PF 10% 16V X5R 01005 ROOM=PMU PLACE_NEAR=U1801:2mm
FOREHEAD_NTC
REAR_CAMERA_NTC
RADIO_PA_NTC
AP_NTC
PMU_TCAL
PMU_XTAL1
PMU_XTAL2
PMU_VDD_RTC
PMU_VSS_RTC
C2002 0.22UF 20% 6.3V X5R 0201 ROOM=PMU
CRITICAL
Y2001 32.768KHZ-20PPM-12.5PF
1.60X1.00-SM ROOM=PMU
C2003 22PF 5% 16V C0G CERM 01005 ROOM=PMU
C2004 22PF 5% 16V C0G CERM 01005 ROOM=PMU
XW2001 SHORT-20L-0.05MM-SM ROOM=PMU OMIT
C2011 100PF 5% 16V NP0-C0G 01005 ROOM=PMU
R2010 3.92K 0.1% 1/20W MF 0201 ROOM=PMU
XW2002 SHORT-20L-0.05MM-SM ROOM=SOC OMIT
XW2003 SHORT-20L-0.05MM-SM ROOM=SOC OMIT
XW2004 SHORT-20L-0.05MM-SM ROOM=SOC OMIT
XW2005 SHORT-20L-0.05MM-SM ROOM=SOC OMIT
RESETS
REFS
COMPARATOR
PMGR
ADC
AMUX
BUTTONS
NTC
GPIO
XTAL
PMU_IREF
PMU_VREF
C2006 0.22UF 20% 6.3V X5R 0201 ROOM=PMU
R2011 200K 1% 1/20W MF 201 ROOM=PMU
PMU_TO_AP_PRE_UVLO_L
PMU_TO_AP_THROTTLE_CPU_L
PMU_TO_AP_THROTTLE_GPU_L
AP_VDD_CPU_SENSE
AP_VDD_GPU_SENSE
PMU_PRE_UVLO_DET
TRISTAR_TO_PMU_USB_BRICK_ID
PMU_ADC_IN
BUTTON_VOL_DOWN_L
BUTTON_POWER_KEY_L
BUTTON_RINGER_A
Reserved for MENU key on dev board
PMU_TO_AP_BUF_VOL_DOWN_L
PMU_TO_AP_BUF_POWER_KEY_L
PMU_TO_AP_BUF_RINGER_A
TIGRIS_TO_PMU_INT_L
BB_TO_PMU_PCIE_HOST_WAKE_L
PMU_TO_BBPMU_RESET_R_L
WLAN_TO_PMU_HOST_WAKE
NFC_TO_PMU_HOST_WAKE
PMU_TO_NAND_LOW_BATT_BOOT_L
NC_PMU_TO_GNSS_EN
PMUGPIO_TO_WLAN_CLK32K
PMU_TO_BT_REG_ON
NC_GNSS_TO_PMU_HOST_WAKE
PMU_TO_WLAN_REG_ON
BT_TO_PMU_HOST_WAKE
PMU_TO_CODEC_DIGLDO_PULLDN
PMU_TO_ACC_BUCK_SW_EN
PMU_TO_BB_USB_VBUS_DETECT
PMU_TO_NFC_EN
PMU_TO_AP_FORCE_DFU_R
PMU_TO_BOOST_EN
PMU_TO_LCM_PANICB
PMU_TO_HOMER_RESET_L
I2C0_AP_SCL
GPIO21 = I2C SCL is for Chestnut dark current mitigation
PP1V8_SDRAM NOSTUFF R2008 100K 5% 1/32W MF 01005 ROOM=PMU
PP1V8_ALWAYS NOSTUFF R2007 220K 5% 1/32W MF 01005 ROOM=PMU
PP1V8_SDRAM NOSTUFF R2015 220K 5% 1/32W MF 01005 ROOM=PMU
NOTE:VDROOP_DET filtering is now inside Adelyn
Button for two-finger reset: 20711463 and 21196187
R2000 1.00K 5% 1/32W MF 01005 ROOM=PMU
PMU_TO_BBPMU_RESET_L
#24511807: Stuff for Carrier
R2009 0.00 0% 1/32W MF 01005
PMU_TO_AP_FORCE_DFU
Sequencer controllable
RS = requires sequencer
FOREHEAD NTC
C2007 100PF 5% 16V NP0-C0G 01005 ROOM=PMU
R2001 10KOHM-1% 01005 ROOM=PMU
FOREHEAD_NTC_RETURN
REAR CAMERA NTC
C2008 100PF 5% 16V NP0-C0G 01005 ROOM=PMU
R2002 10KOHM-1% 01005 ROOM=PMU
RCAM_NTC_RETURN
RADIO PA NTC
C2009 100PF 5% 16V NP0-C0G 01005 ROOM=PMU
R2003 10KOHM-1% 01005 ROOM=PMU
PA_NTC_RETURN
AP NTC
C2010 100PF 5% 16V NP0-C0G 01005 ROOM=PMU
R2004 10KOHM-1% 01005 ROOM=PMU
AP_NTC_RETURN
NOTE:100PF CAPS ARE THE SAMPLING CAPS FOR PMU ADC
PAGE TITLE
SYSTEM POWER:PMU (3/3)
Apple Inc.
DRAWING NUMBER 051-00482
SIZE D
REVISION 8.0.0
BRANCH
PAGE 20 OF 53
SHEET 20 OF 81
NOTICE OF PROPRIETARY PROPERTY:
THE INFORMATION CONTAINED HEREIN IS THE PROPRIETARY PROPERTY OF APPLE INC.
THE POSESSOR AGREES TO THE FOLLOWING:
I TO MAINTAIN THIS DOCUMENT IN CONFIDENCE
II NOT TO REPRODUCE OR COPY IT
III NOT TO REVEAL OR PUBLISH IT IN WHOLE OR PART
IV ALL RIGHTS RESERVED

# TIGRIS CHARGER

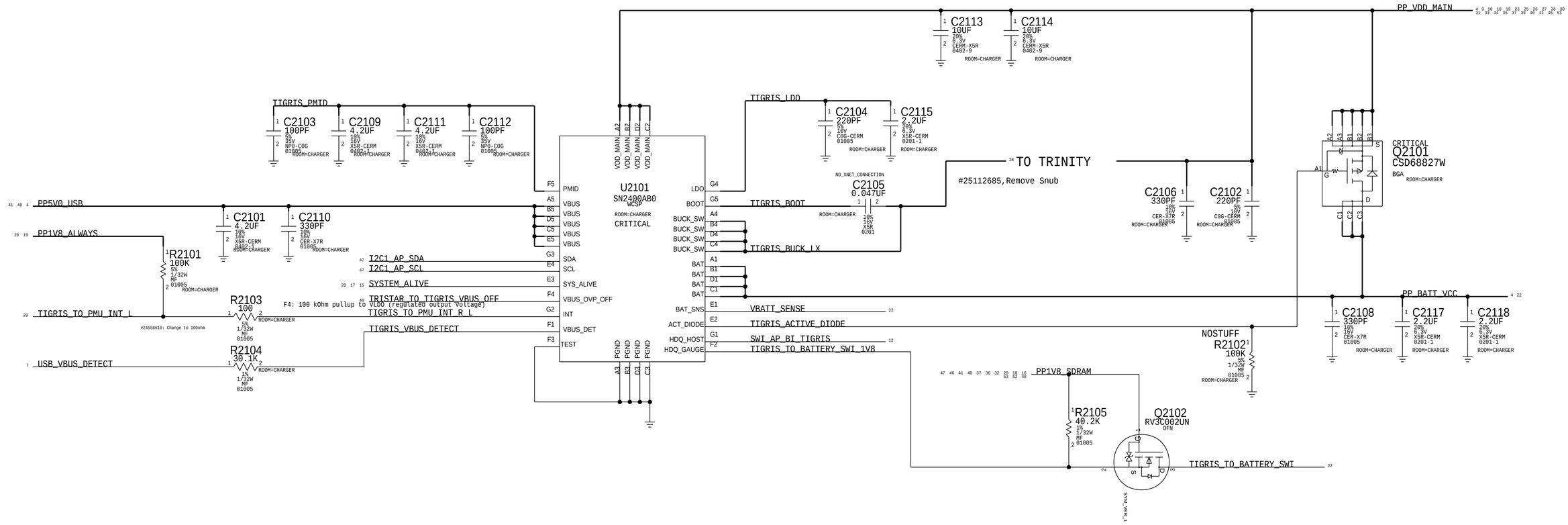


PAGE TITLE

SYSTEM POWER:CHARGER

Apple Inc.

DRAWING NUMBER 051-00482 SIZE D

REVISION 8.0.0

BRANCH

PAGE 21 OF 53

SHEET 21 OF 81

NOTICE OF PROPRIETARY PROPERTY:

THE INFORMATION CONTAINED HEREIN IS THE PROPRIETARY PROPERTY OF APPLE INC.
THE POSESSOR AGREES TO THE FOLLOWING:
I TO MAINTAIN THIS DOCUMENT IN CONFIDENCE
II NOT TO REPRODUCE OR COPY IT
III NOT TO REVEAL OR PUBLISH IT IN WHOLE OR PART
IV ALL RIGHTS RESERVED

# BATTERY CONNECTOR

THIS ONE ON MLB ---> 516S00172 (matches d10 mlb MCO rev 27)

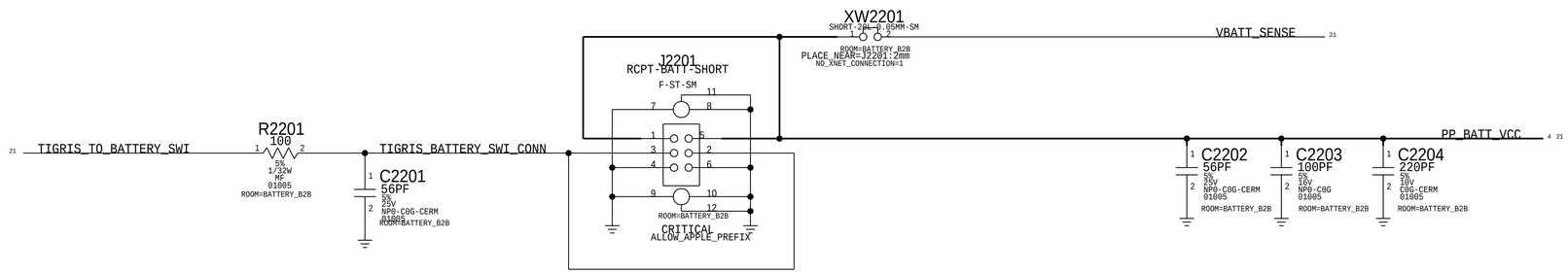


PAGE TITLE

SYSTEM POWER:BATTERY CONN

Apple Inc.

DRAWING NUMBER 051-00482 SIZE D

REVISION 8.0.0

BRANCH

PAGE 22 OF 53

SHEET 22 OF 81

NOTICE OF PROPRIETARY PROPERTY:

THE INFORMATION CONTAINED HEREIN IS THE PROPRIETARY PROPERTY OF APPLE INC.
THE POSESSOR AGREES TO THE FOLLOWING:

I TO MAINTAIN THIS DOCUMENT IN CONFIDENCE

II NOT TO REPRODUCE OR COPY IT

III NOT TO REVEAL OR PUBLISH IT IN WHOLE OR PART

IV ALL RIGHTS RESERVED

# BOOST

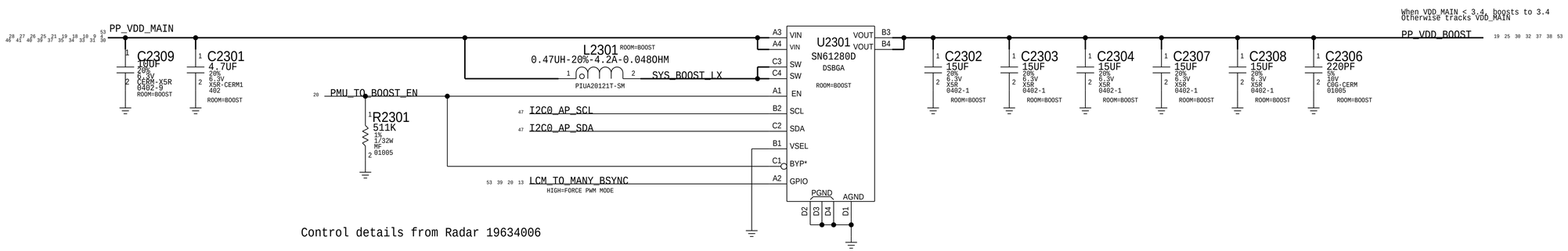


Control details from Radar 19634006

PAGE TITLE

SYSTEM POWER:BOOST

Apple Inc.

DRAWING NUMBER 051-00482

SIZE D

REVISION 8.0.0

BRANCH

PAGE 23 OF 53

SHEET 23 OF 81

NOTICE OF PROPRIETARY PROPERTY:

THE INFORMATION CONTAINED HEREIN IS THE PROPRIETARY PROPERTY OF APPLE INC.
THE POSESSOR AGREES TO THE FOLLOWING:
I TO MAINTAIN THIS DOCUMENT IN CONFIDENCE
II NOT TO REPRODUCE OR COPY IT
III NOT TO REVEAL OR PUBLISH IT IN WHOLE OR PART
IV ALL RIGHTS RESERVED

# CARBON - ACCEL & GYRO

INVENSENSE, MPU-6800: C2403=0.1UF

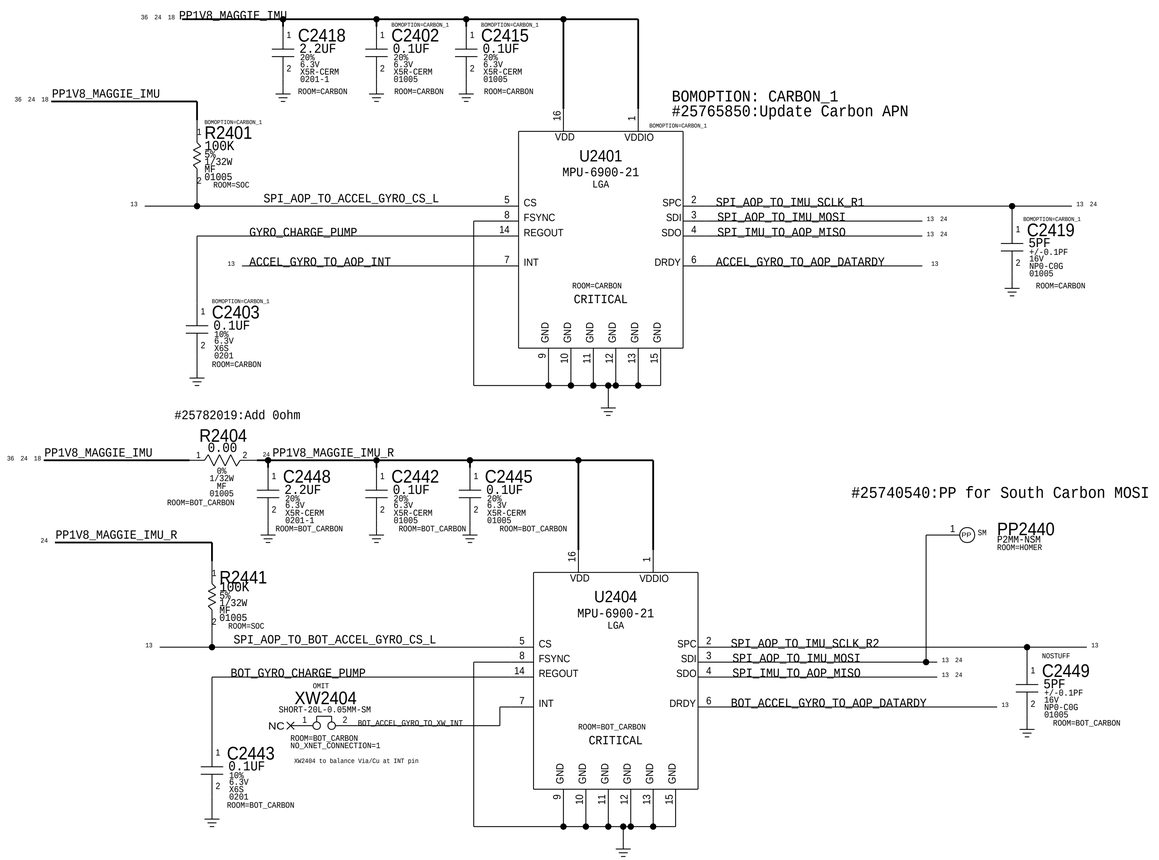


#25782019:Add 0ohm




#25740540:PP for South Carbon MOSI




# MAGNESIUM - COMPASS

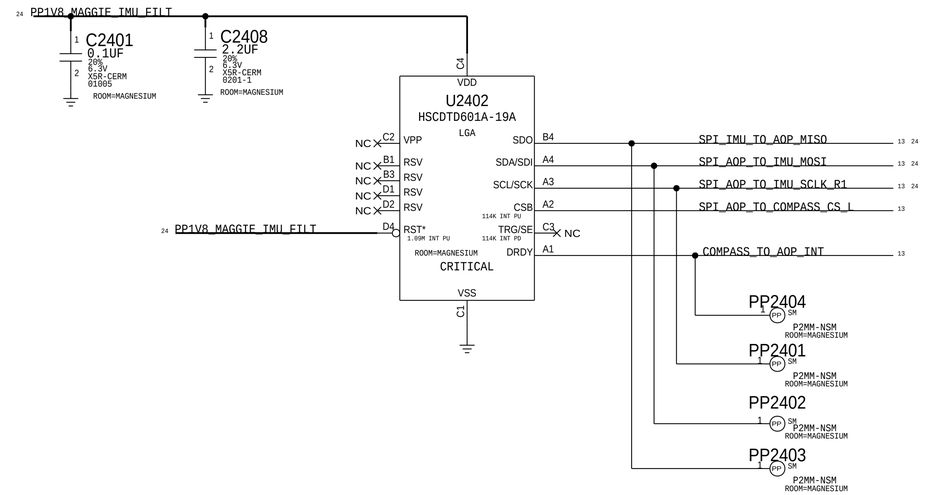


# PHOSPHORUS

#24593845

BOSCH (APN:338S00188): nostuff C2420/C2421/C2422/C2423 and R2403 PU
ST (APN:338S00230): stuff C2420-C2423, C2420R2422 with 155S00017, stuff R2403 PU
C2420=4pF(131S0253),C2405=3pF(131S0251) per #25691124

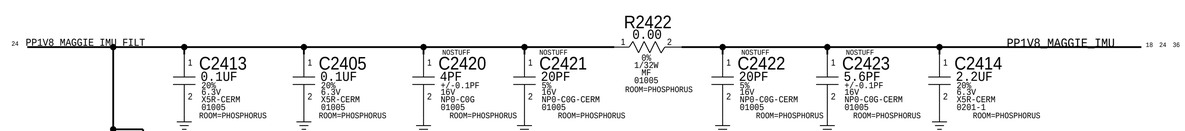


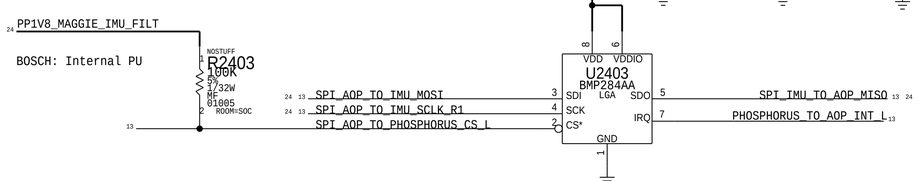


PAGE TITLE

SENSORS

Apple Inc.

DRAWING NUMBER 051-00482 SIZE D

REVISION 8.0.0

BRANCH

PAGE 24 OF 53

SHEET 24 OF 81


NOTICE OF PROPRIETARY PROPERTY:

THE INFORMATION CONTAINED HEREIN IS THE PROPRIETARY PROPERTY OF APPLE INC. THE POSESSOR AGREES TO THE FOLLOWING:

I TO MAINTAIN THIS DOCUMENT IN CONFIDENCE

II NOT TO REPRODUCE OR COPY IT

III NOT TO REVEAL OR PUBLISH IT IN WHOLE OR PART

IV ALL RIGHTS RESERVED

# UTAH POWER

Scrub voltage selection

NOTE: OUTPUT IMPDEANCE MUST BE >0.005-OHM
IN ORDER TO MEET CAP ESR REQUIREMENT PER LDO SPEC.
VENDOR ALSO RECOMMENDS CIN = COUT FOR STABILITY

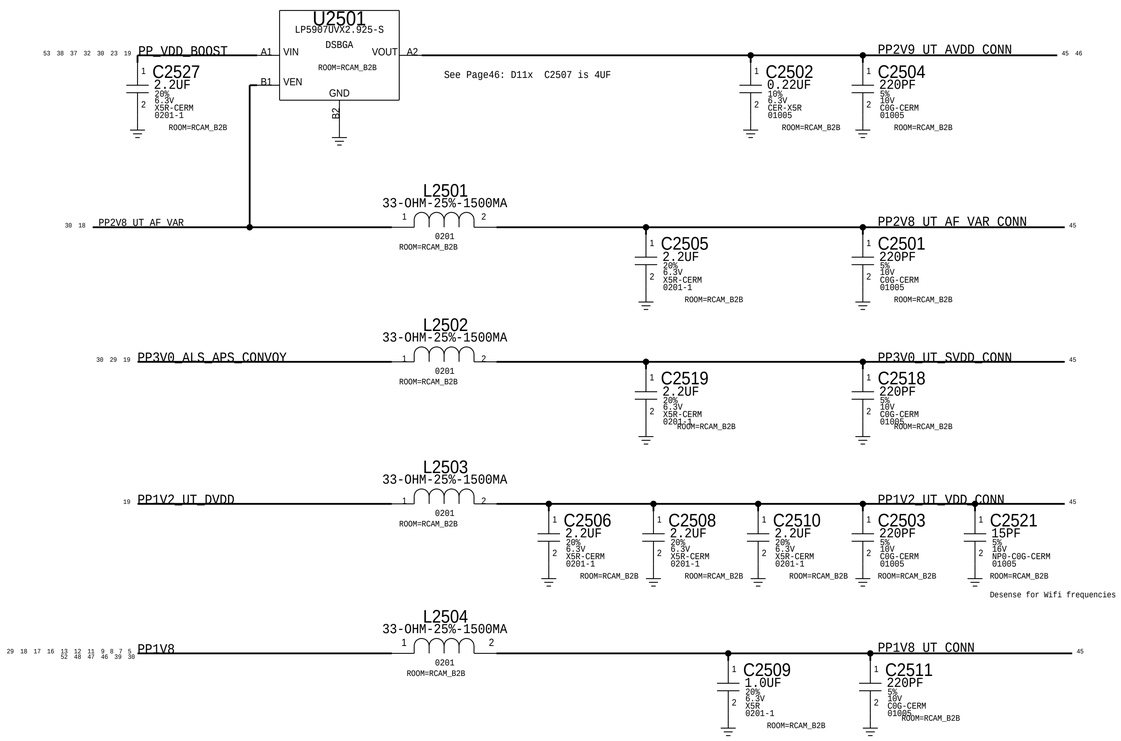


# IO FILTERS

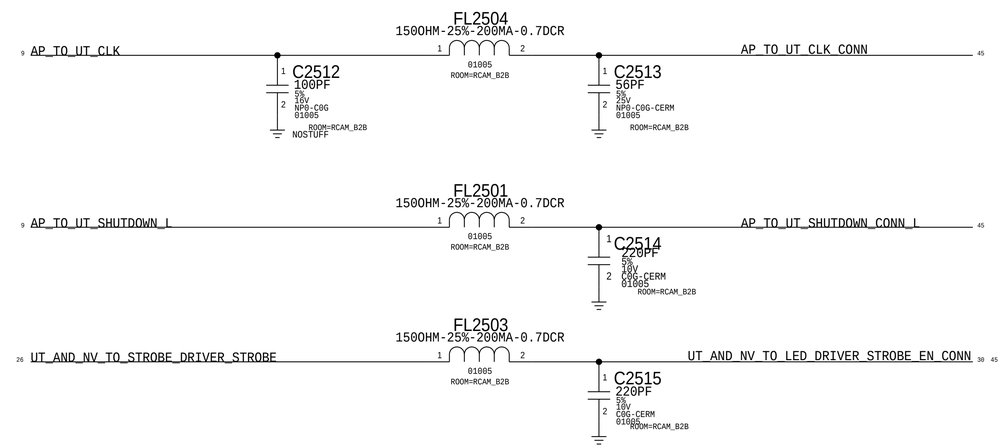


# LPDP FILTERS

AC return path for LPDP which is referenced to GND and VDD_MAIN

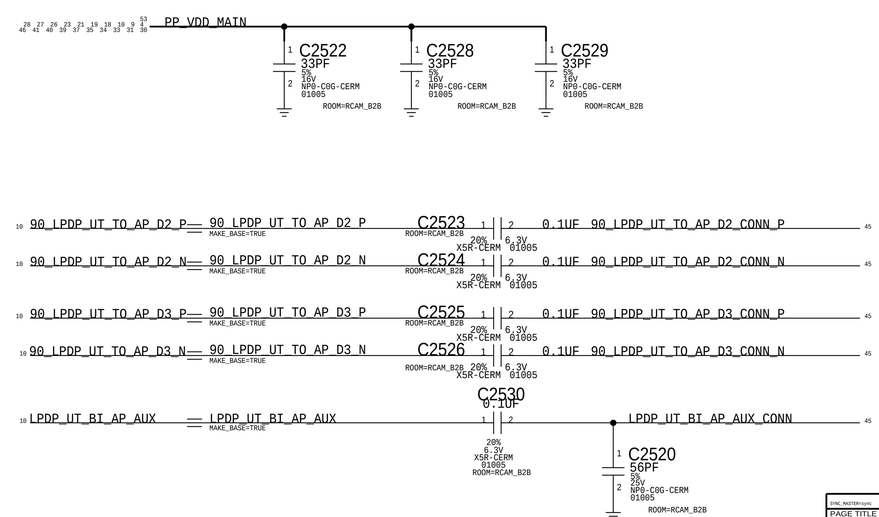


| | |
|---|---|
| PAGE TITLE | B2B FILTERS: UTAH |
| Apple Inc. | DRAWING NUMBER 051-00482 SIZE D |
| | REVISION 8.0.0 |
| NOTICE OF PROPRIETARY PROPERTY: | BRANCH |
| THE INFORMATION CONTAINED HEREIN IS THE PROPRIETARY PROPERTY OF APPLE INC. THE POSESSOR AGREES TO THE FOLLOWING: I TO MAINTAIN THIS DOCUMENT IN CONFIDENCE II NOT TO REPRODUCE OR COPY IT III NOT TO REVEAL OR PUBLISH IT IN WHOLE OR PART IV ALL RIGHTS RESERVED | PAGE 25 OF 53 |
| | SHEET 25 OF 81 |

# STROBE DRIVERS INSIDE NEO SIP MODULE

D10/sip_neo

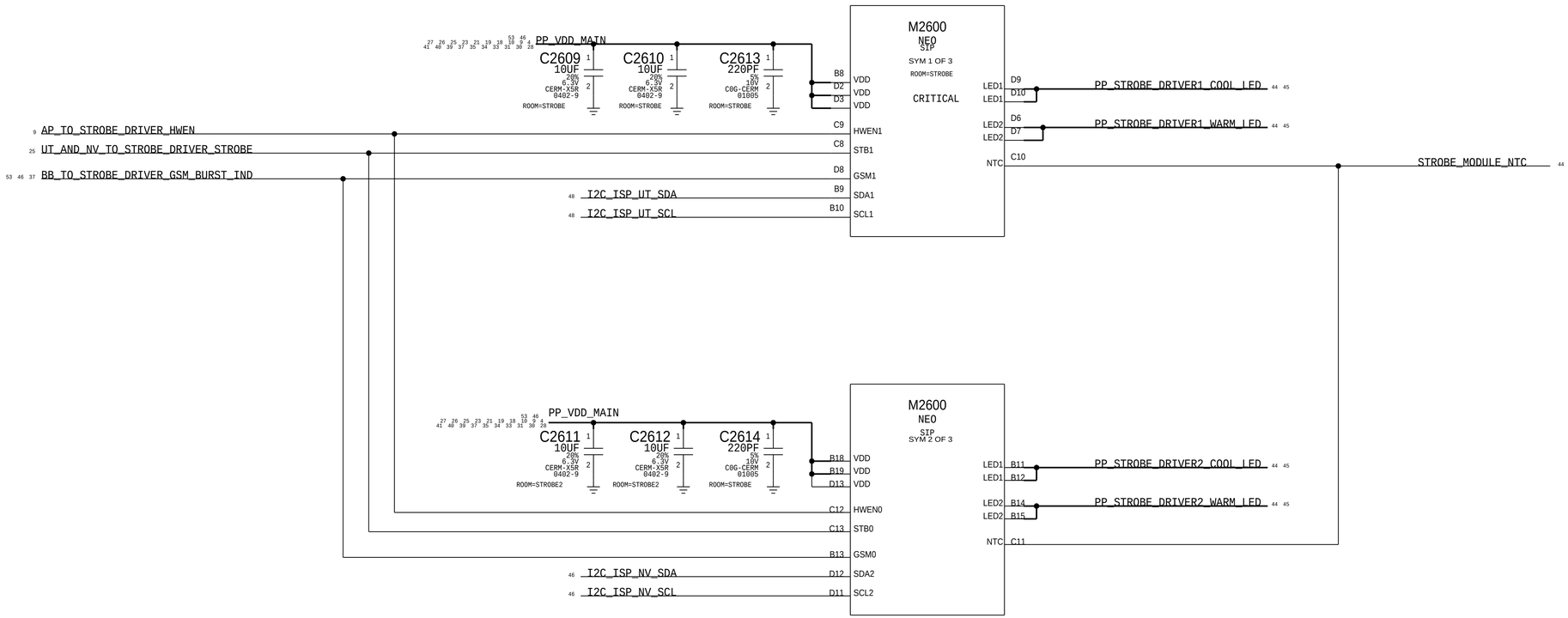


CDS_LIB=apple

PAGE TITLE

CAMERA:STROBE DRIVER

Apple Inc.

DRAWING NUMBER 051-00482

SIZE D

REVISION 8.0.0

BRANCH

PAGE 26 OF 53

SHEET 26 OF 81

NOTICE OF PROPRIETARY PROPERTY:

THE INFORMATION CONTAINED HEREIN IS THE PROPRIETARY PROPERTY OF APPLE INC.
THE POSESSOR AGREES TO THE FOLLOWING:
I TO MAINTAIN THIS DOCUMENT IN CONFIDENCE
II NOT TO REPRODUCE OR COPY IT
III NOT TO REVEAL OR PUBLISH IT IN WHOLE OR PART
IV ALL RIGHTS RESERVED

# ACCESSORY BUCK

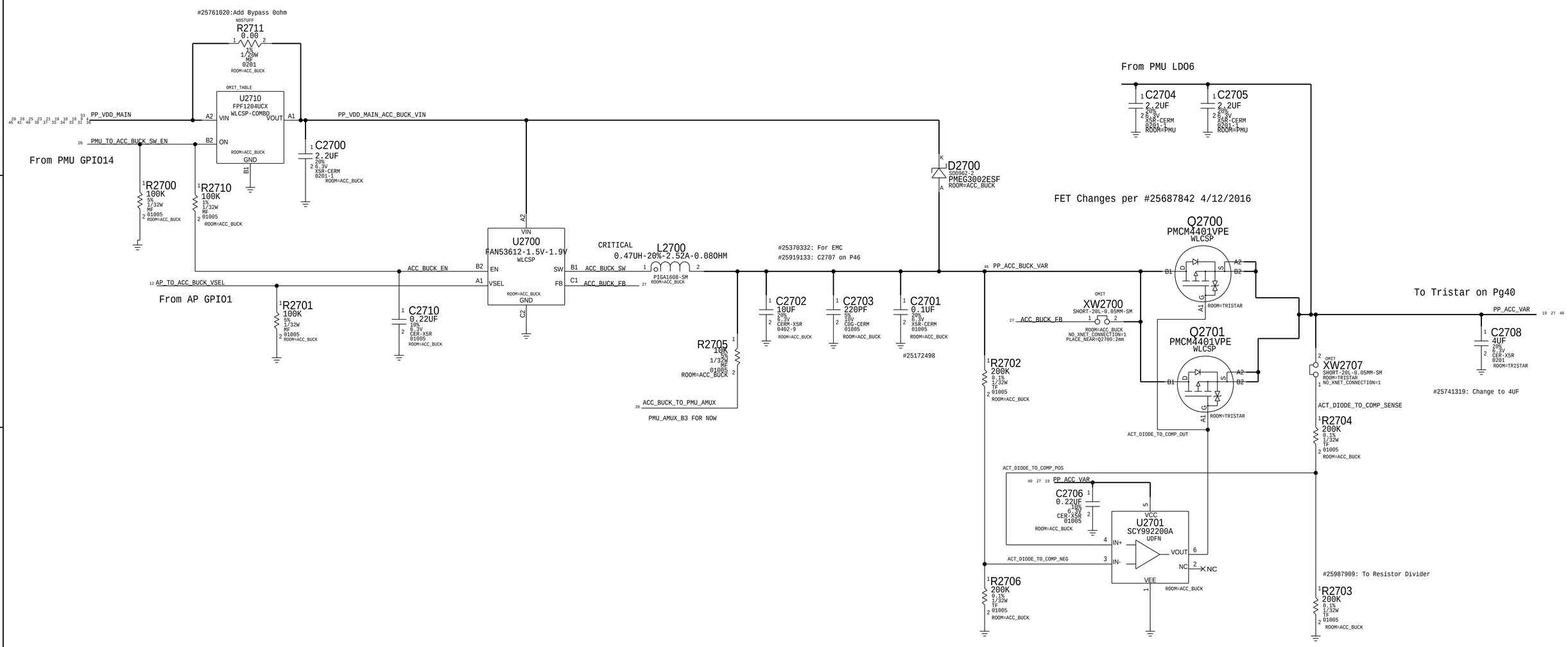


SYNC_MASTER=sync SYNC_DATE=05/17/2016

PAGE TITLE
Accessory: Buck Circuit

Apple Inc.

DRAWING NUMBER 051-00482 SIZE D

REVISION 8.0.0

BRANCH

PAGE 27 OF 53

SHEET 27 OF 81

NOTICE OF PROPRIETARY PROPERTY:
THE INFORMATION CONTAINED HEREIN IS THE PROPRIETARY PROPERTY OF APPLE INC.
THE POSESSOR AGREES TO THE FOLLOWING:
I TO MAINTAIN THIS DOCUMENT IN CONFIDENCE
II NOT TO REPRODUCE OR COPY IT
III NOT TO REVEAL OR PUBLISH IT IN WHOLE OR PART
IV ALL RIGHTS RESERVED

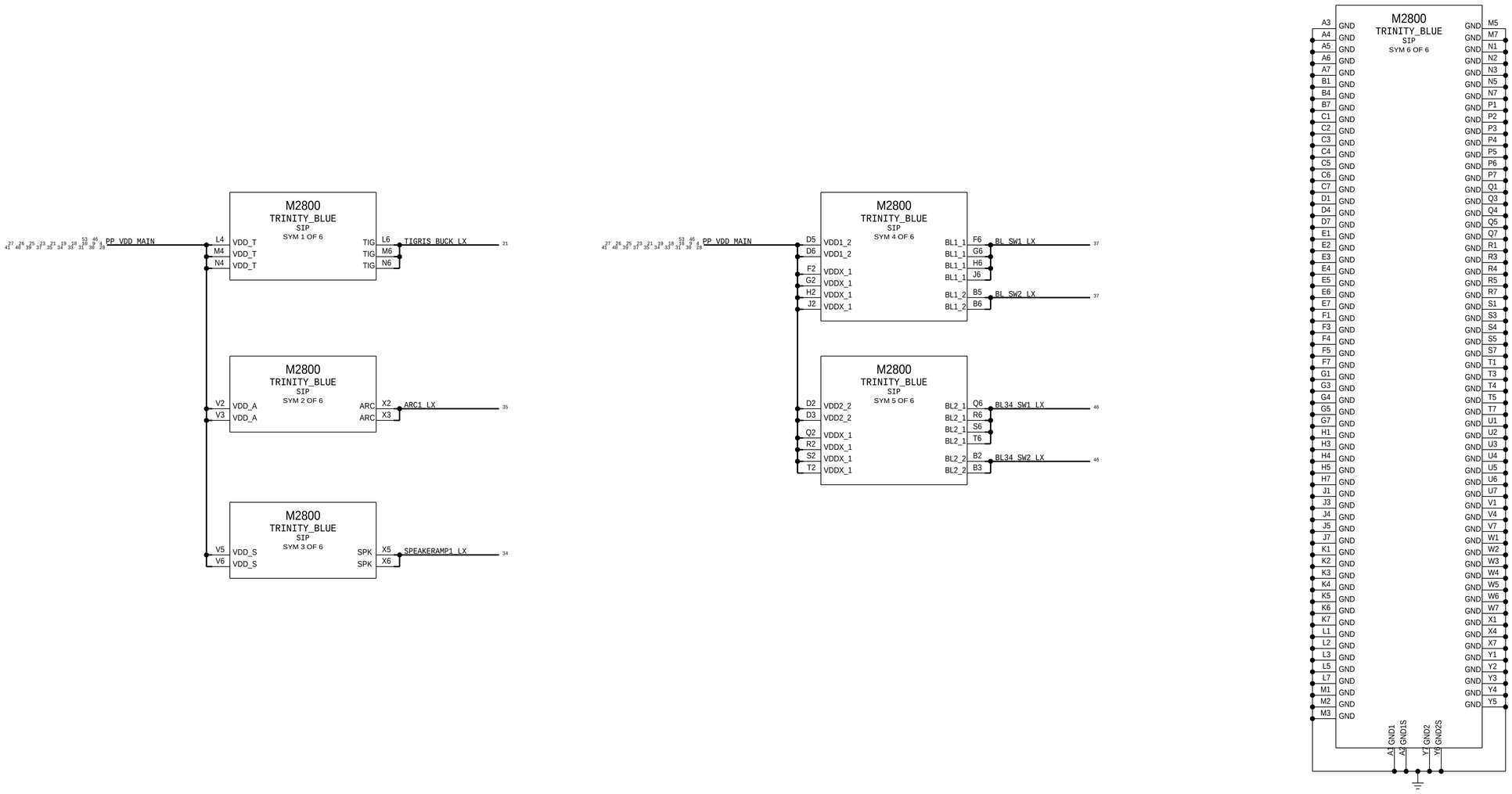


| | |
|---|---|
| PAGE TITLE | TRINITY:FF SPECIFIC |
| Apple Inc. | DRAWING NUMBER 051-00482 SIZE D |
| | REVISION 8.0.0 |
| | BRANCH |
| | PAGE 28 OF 53 |
| | SHEET 28 OF 81 |

NOTICE OF PROPRIETARY PROPERTY:
THE INFORMATION CONTAINED HEREIN IS THE PROPRIETARY PROPERTY OF APPLE INC.
THE POSESSOR AGREES TO THE FOLLOWING:
I TO MAINTAIN THIS DOCUMENT IN CONFIDENCE
II NOT TO REPRODUCE OR COPY IT
III NOT TO REVEAL OR PUBLISH IT IN WHOLE OR PART
IV ALL RIGHTS RESERVED

## NEW HAMPSHIRE POWER

FL2901 33-OHM-25%-1500MA
PP1V8 → PP1V8_NH_TO_CONN
C2914 0.1UF 20% 6.3V X5R-CERM 01005 ROOM=FOREHEAD
C2902 220PF 5% 10V C0G-CERM 01005 ROOM=FOREHEAD

FL2902 33-OHM-25%-1500MA
PP1V2_NH_NV_DVDD → PP1V2_NH_DVDD_CONN
C2916 2.2UF 20% 6.3V X5R-CERM 0201-1 ROOM=FOREHEAD
C2915 0.1UF 20% 6.3V X5R-CERM 01005 ROOM=FOREHEAD
C2903 220PF 5% 10V C0G-CERM 01005 ROOM=FOREHEAD

FL2903 10-OHM-750MA
PP2V9_NH_AVDD → PP2V9_NH_AVDD_CONN
C2909 2.2UF 20% 6.3V X5R-CERM 0201-1 ROOM=FOREHEAD
C2901 0.1UF 20% 6.3V X5R-CERM 01005 ROOM=FOREHEAD
C2904 220PF 5% 10V C0G-CERM 01005 ROOM=FOREHEAD

## NEW HAMPSHIRE I/O

FL2907 1500HM-25%-200MA-0.7DCR
AP_TO_NH_CLK → AP_TO_NH_CLK_CONN
C2910 56PF 5% 25V NP0-C0G-CERM 01005 ROOM=FOREHEAD

FL2908 1500HM-25%-200MA-0.7DCR
AP_TO_NH_SHUTDOWN_L → AP_TO_NH_SHUTDOWN_CONN_L
C2911 220PF 5% 10V C0G-CERM 01005 ROOM=FOREHEAD

## CONVOY I/O

#25657495: Update FL2905 to 100ohm

R2905 100 5% 1/32W MF 01005 ROOM=FOREHEAD
PDM_ADARE_TO_CONVOY_CLK → PDM_ADARE_TO_CONVOY_CLK_CONN
C2905 56PF 5% 25V NP0-C0G-CERM 01005 ROOM=FOREHEAD

FL2906 1500HM-25%-200MA-0.7DCR
PDM_CONVOY_TO_ADARE_DATA → PDM_CONVOY_TO_ADARE_DATA_CONN
C2906 56PF 5% 25V NP0-C0G-CERM 01005 ROOM=FOREHEAD

## PROX/ALS I/O

#25170697: R2915 to 240ohm/C2921 to 220pF

R2915 240 1% 1/32W MF 01005 ROOM=FOREHEAD
PROX_BI_AP_AOP_INT_PWM_L → PROX_BI_AP_AOP_INT_PWM_L_CONN
C2921 220PF 5% 10V C0G-CERM 01005 ROOM=FOREHEAD

FL2911 1500HM-25%-200MA-0.7DCR
ALS_TO_AP_INT_L → ALS_TO_AP_INT_CONN_L
C2924 56PF 5% 25V NP0-C0G-CERM 01005 ROOM=FOREHEAD

## PROX, ALS, & CONVOY POWER

FL2913 1500HM-25%-200MA-0.7DCR
PP3V0_ALS_APS_CONVOY → PP3V0_ALS_CONVOY_CONN
C2917 2.2UF 20% 6.3V X5R-CERM 0201-1 ROOM=FOREHEAD
C2926 220PF 5% 10V C0G-CERM 01005 ROOM=FOREHEAD

FL2910 1500HM-25%-200MA-0.7DCR
PP3V0_TRISTAR_ANT_PROX → PP3V0_PROX_CONN
#24511567: Remove C2918
C2927 2.2UF 20% 6.3V X5R-CERM 0201-1 ROOM=FOREHEAD
C2908 220PF 5% 10V C0G-CERM 01005 ROOM=FOREHEAD

## SPEAKER2

C2932 220PF 5% 10V C0G-CERM 01005 ROOM=FOREHEAD (NO_XNET_CONNECTION=1)
SPEAKERAMP2_TO_SPEAKER_OUT_POS
C2935 220PF 5% 10V C0G-CERM 01005 ROOM=FOREHEAD (NO_XNET_CONNECTION=1)
SPEAKERAMP2_TO_SPEAKER_OUT_NEG
C2931 220PF 5% 10V C0G-CERM 01005 ROOM=FOREHEAD (NO_XNET_CONNECTION=1)

R2903 0.00 0% 1/32W MF 01005 ROOM=FOREHEAD
SPEAKER_TO_SPEAKERAMP2_VSENSE_P → SPEAKER_TO_SPEAKERAMP2_VSENSE_CONN_P
C2933 100PF 5% 35V NP0-C0G 01005 ROOM=FOREHEAD (NO_XNET_CONNECTION=1)

R2904 0.00 0% 1/32W MF 01005 ROOM=FOREHEAD
SPEAKER_TO_SPEAKERAMP2_VSENSE_N → SPEAKER_TO_SPEAKERAMP2_VSENSE_CONN_N
C2934 100PF 5% 35V NP0-C0G 01005 ROOM=FOREHEAD (NO_XNET_CONNECTION=1)

## MIC3

FL2914 1500HM-25%-200MA-0.7DCR
PP_CODEC_TO_FRONTMIC3_BIAS → PP_CODEC_TO_FRONTMIC3_BIAS_CONN
DZ2905 6.8V-100PF 01005 ROOM=FOREHEAD

FL2904 1500HM-25%-200MA-0.7DCR
FRONTMIC3_TO_CODEC_AIN4_N → FRONTMIC3_TO_CODEC_AIN4_CONN_N
DZ2906 6.8V-100PF 01005 ROOM=FOREHEAD (NO_XNET_CONNECTION=1)

FL2909 1500HM-25%-200MA-0.7DCR
FRONTMIC3_TO_CODEC_AIN4_P → FRONTMIC3_TO_CODEC_AIN4_CONN_P
DZ2907 6.8V-100PF 01005 ROOM=FOREHEAD (NO_XNET_CONNECTION=1)

PAGE TITLE: B2B:FOREHEAD

Apple Inc.

DRAWING NUMBER: 051-00482 SIZE: D
REVISION: 8.0.0
BRANCH:
PAGE: 29 OF 53
SHEET: 29 OF 81

NOTICE OF PROPRIETARY PROPERTY:
THE INFORMATION CONTAINED HEREIN IS THE PROPRIETARY PROPERTY OF APPLE INC.
THE POSESSOR AGREES TO THE FOLLOWING:
I TO MAINTAIN THIS DOCUMENT IN CONFIDENCE
II NOT TO REPRODUCE OR COPY IT
III NOT TO REVEAL OR PUBLISH IT IN WHOLE OR PART
IV ALL RIGHTS RESERVED

# NEVADA POWER

NOTE: OUTPUT IMPDEANCE MUST BE >0.005-OHM

IN ORDER TO MEET CAP ESR REQUIREMENT PER LDO SPEC.
VENDOR ALSO RECOMMENDS CIN = COUT FOR STABILITY

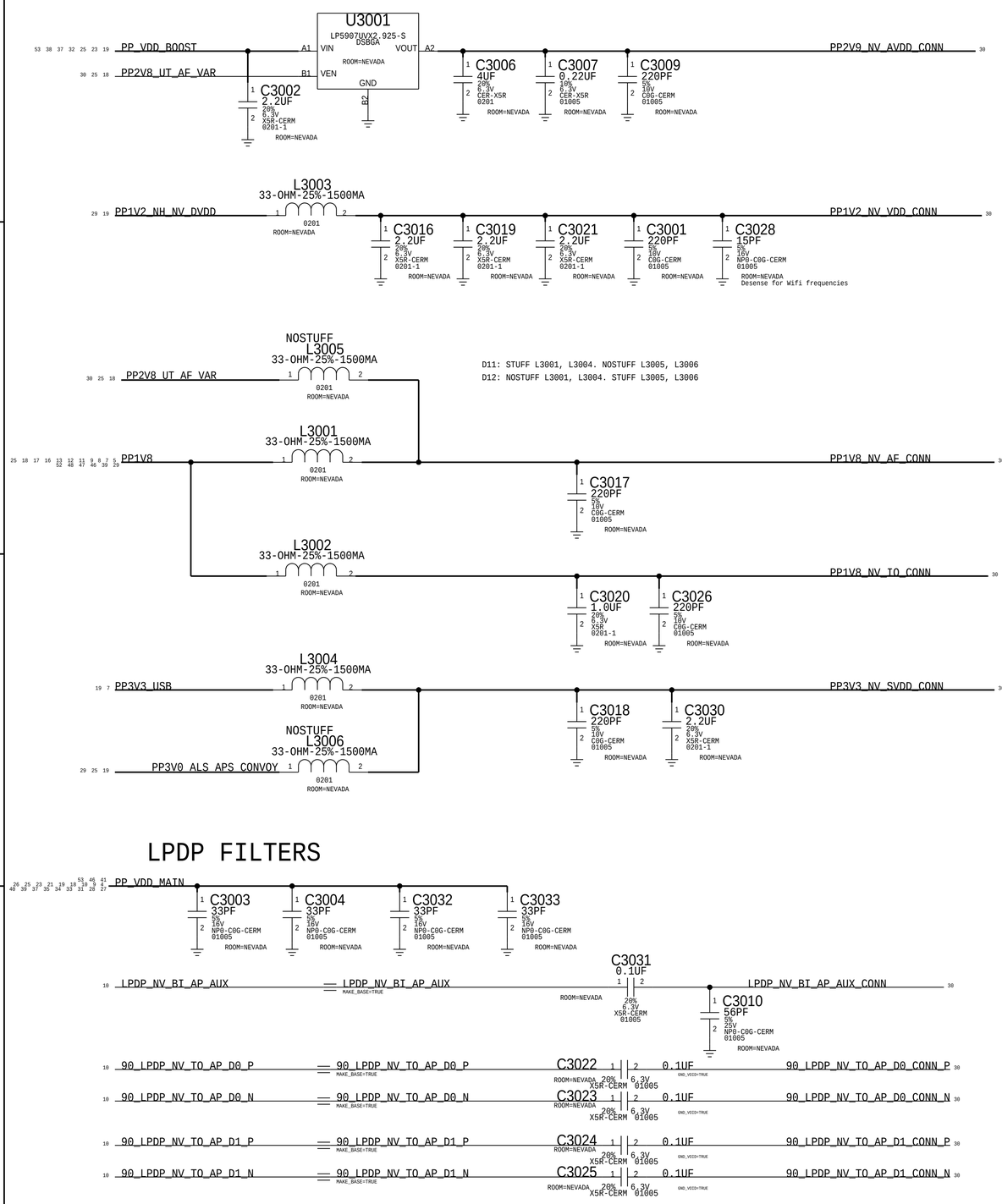


# LPDP FILTERS




# NEVADA CONNECTOR

THIS ONE ---> 516S00152 RCPT (USED ON MLB)
516S00151 PLUG

THIS PAGE UNIQUE TO LARGE FORM FACTOR
OTHER FORM FACTOR SPECIFIC PAGES:
4 - Mechanical
46 - FF Specific

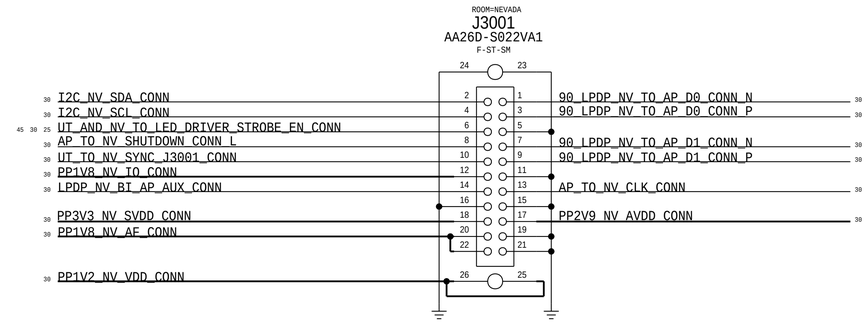


# GPIO FILTERS

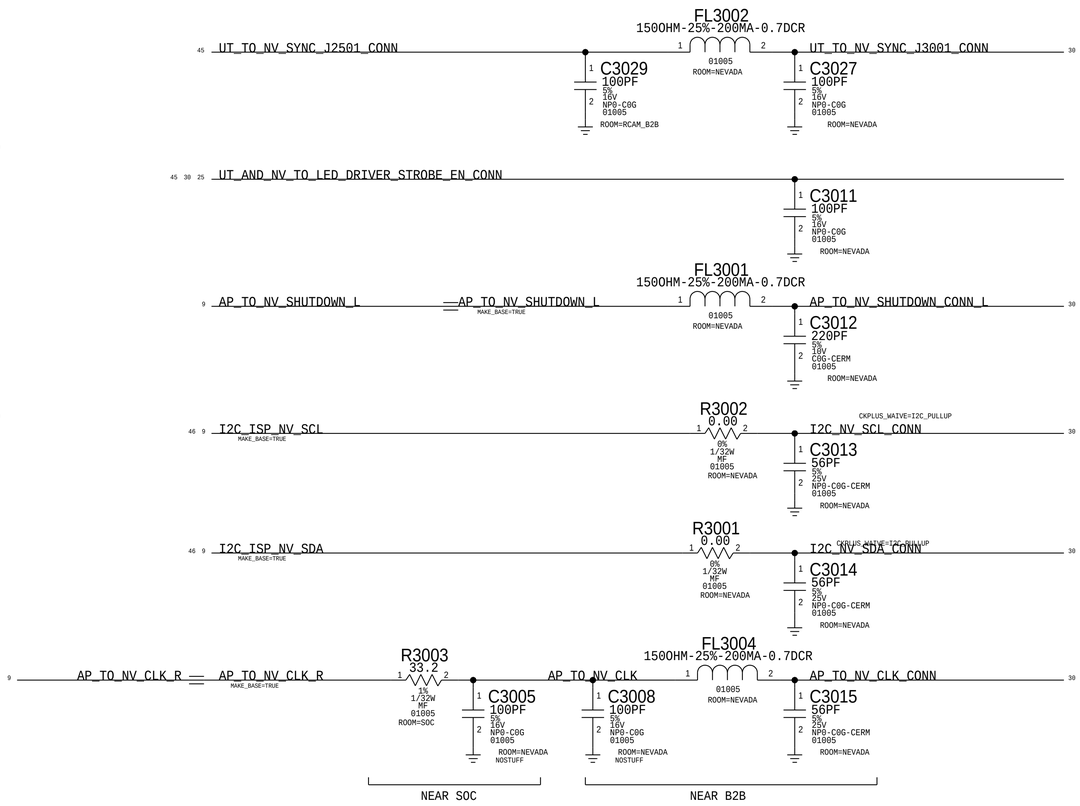


PAGE TITLE
B2B:NEVADA

Apple Inc.

DRAWING NUMBER 051-00482
SIZE D
REVISION 8.0.0
BRANCH
PAGE 30 OF 53
SHEET 30 OF 81


NOTICE OF PROPRIETARY PROPERTY:
THE INFORMATION CONTAINED HEREIN IS THE PROPRIETARY PROPERTY OF APPLE INC.
THE POSESSOR AGREES TO THE FOLLOWING:
I TO MAINTAIN THIS DOCUMENT IN CONFIDENCE
II NOT TO REPRODUCE OR COPY IT
III NOT TO REVEAL OR PUBLISH IT IN WHOLE OR PART
IV ALL RIGHTS RESERVED

# CALTRA AUDIO CODEC (ANALOG INPUTS & OUTPUTS)

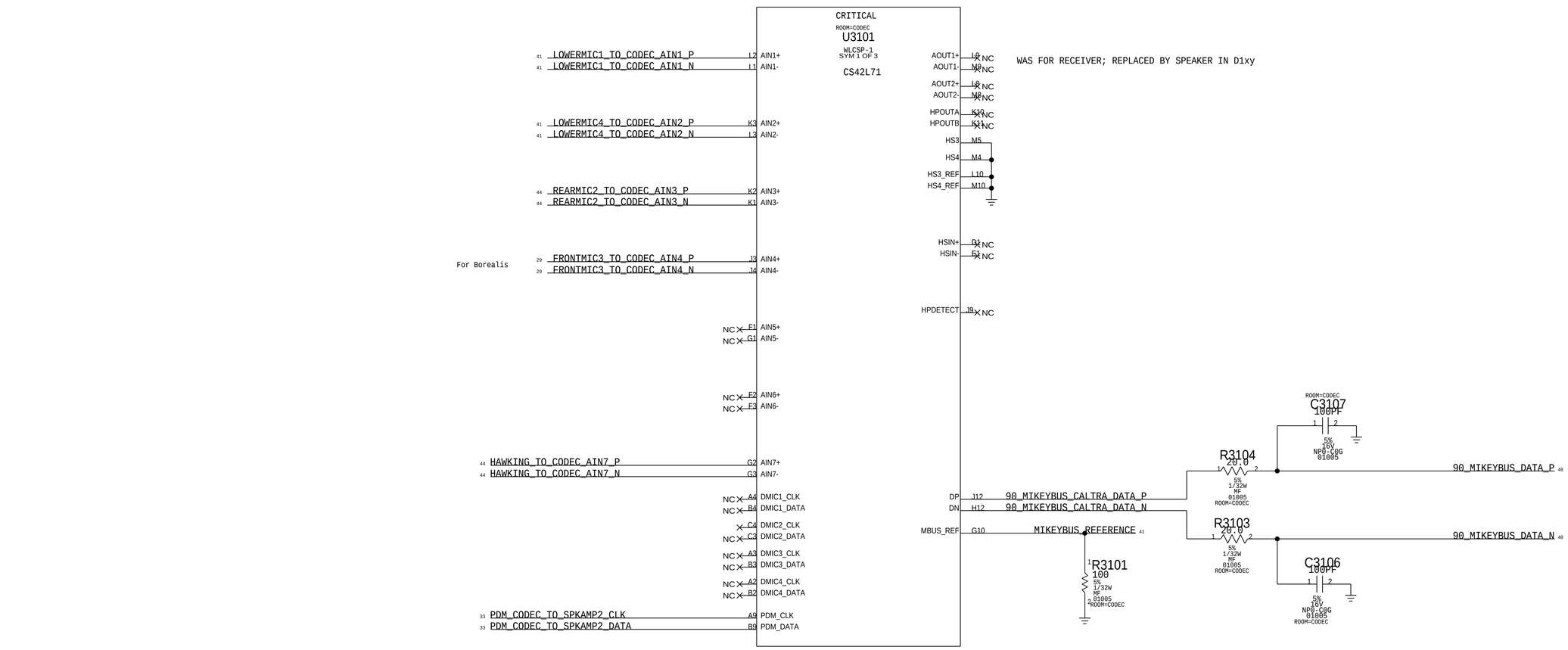

AC return path for Mikeybus which is referenced to GND and VDD_MAIN

Radar 21203307

PAGE TITLE
AUDIO:CALTRA CODEC (1/2)

Apple Inc.

DRAWING NUMBER 051-00482
SIZE D
REVISION 8.0.0
BRANCH
PAGE 31 OF 53
SHEET 31 OF 81

NOTICE OF PROPRIETARY PROPERTY:
THE INFORMATION CONTAINED HEREIN IS THE PROPRIETARY PROPERTY OF APPLE INC.
THE POSESSOR AGREES TO THE FOLLOWING:
I TO MAINTAIN THIS DOCUMENT IN CONFIDENCE
II NOT TO REPRODUCE OR COPY IT
III NOT TO REVEAL OR PUBLISH IT IN WHOLE OR PART
IV ALL RIGHTS RESERVED

# CALTRA AUDIO CODEC (POWER & I/O)

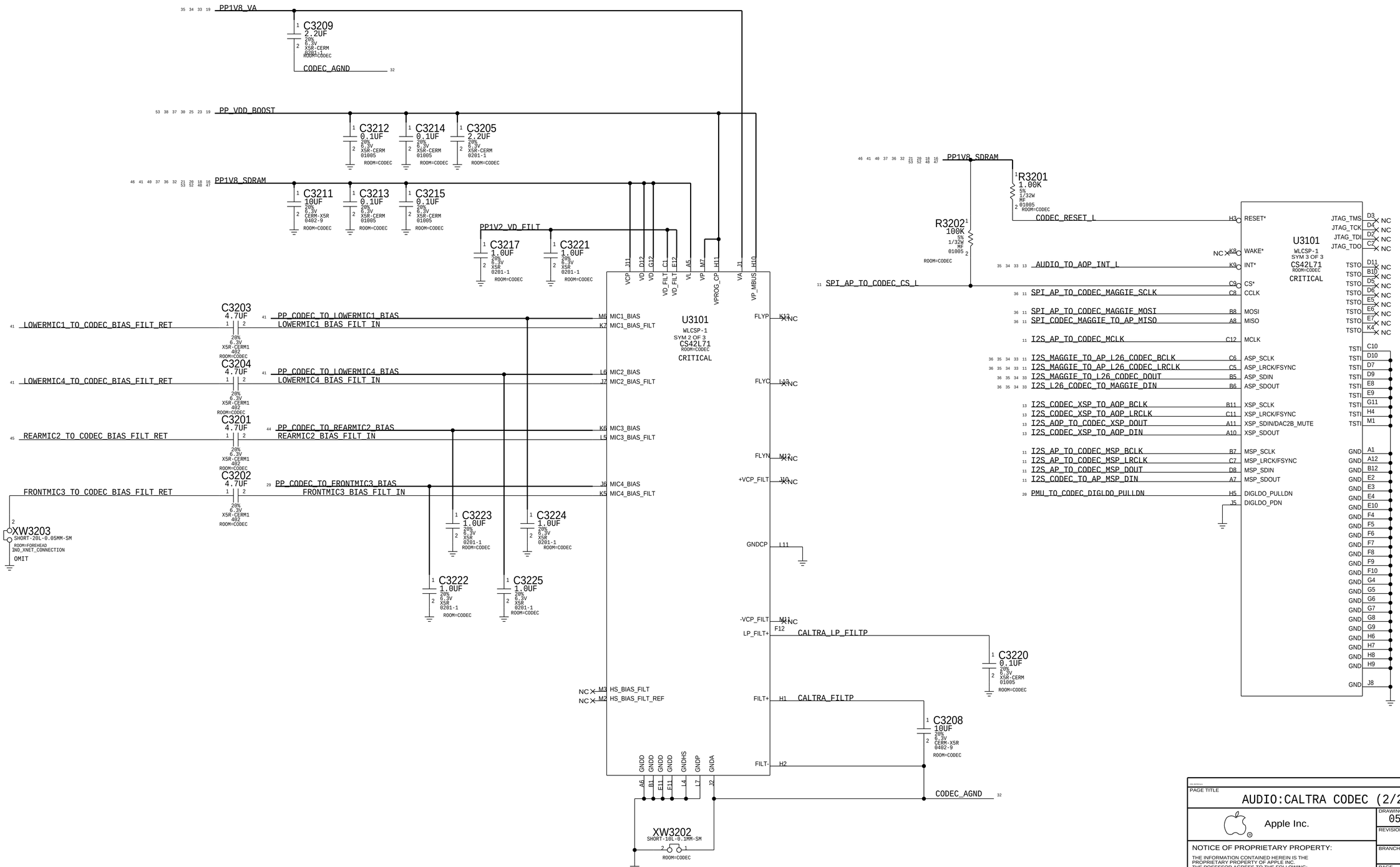


PAGE TITLE

AUDIO:CALTRA CODEC (2/2)

Apple Inc.

DRAWING NUMBER 051-00482 SIZE D

REVISION 8.0.0

BRANCH

PAGE 32 OF 53

SHEET 32 OF 81

NOTICE OF PROPRIETARY PROPERTY:

THE INFORMATION CONTAINED HEREIN IS THE PROPRIETARY PROPERTY OF APPLE INC.
THE POSESSOR AGREES TO THE FOLLOWING:
I TO MAINTAIN THIS DOCUMENT IN CONFIDENCE
II NOT TO REPRODUCE OR COPY IT
III NOT TO REVEAL OR PUBLISH IT IN WHOLE OR PART
IV ALL RIGHTS RESERVED

# SPEAKER AMPLIFIER 2 (North)

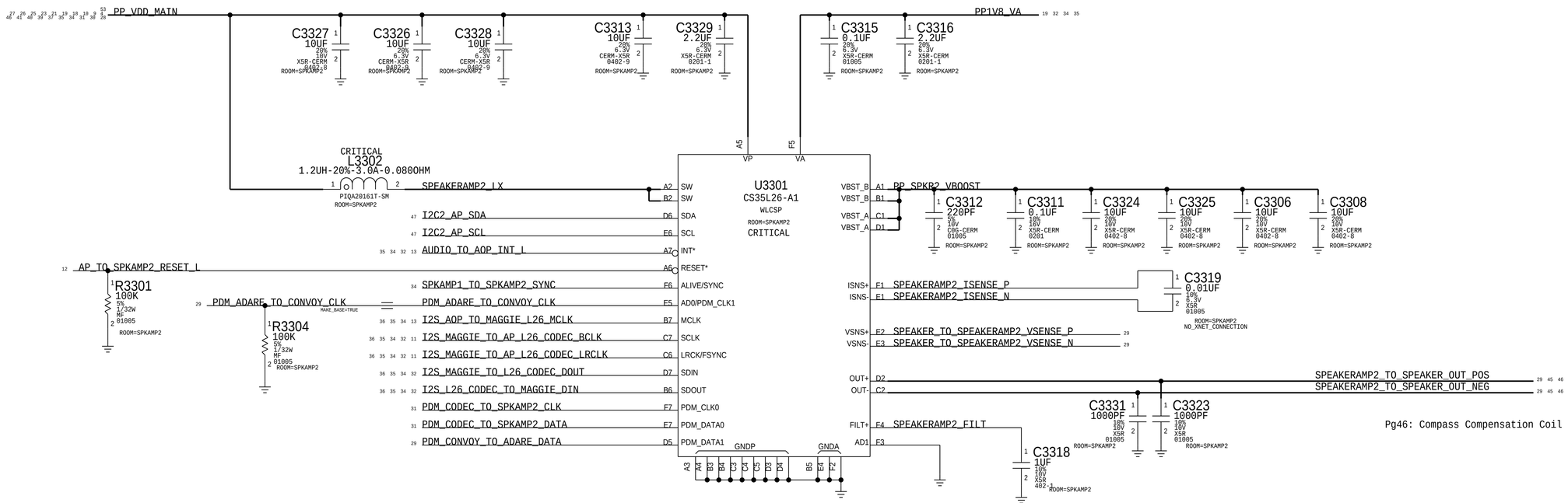


Pg46: Compass Compensation Coil

PAGE TITLE

## AUDIO:SPEAKER AMP 2

Apple Inc.

DRAWING NUMBER 051-00482 SIZE D

REVISION 8.0.0

BRANCH

PAGE 33 OF 53

SHEET 33 OF 81

NOTICE OF PROPRIETARY PROPERTY:
THE INFORMATION CONTAINED HEREIN IS THE PROPRIETARY PROPERTY OF APPLE INC.
THE POSESSOR AGREES TO THE FOLLOWING:
I TO MAINTAIN THIS DOCUMENT IN CONFIDENCE
II NOT TO REPRODUCE OR COPY IT
III NOT TO REVEAL OR PUBLISH IT IN WHOLE OR PART
IV ALL RIGHTS RESERVED

# SPEAKER AMPLIFIER 1

(South)

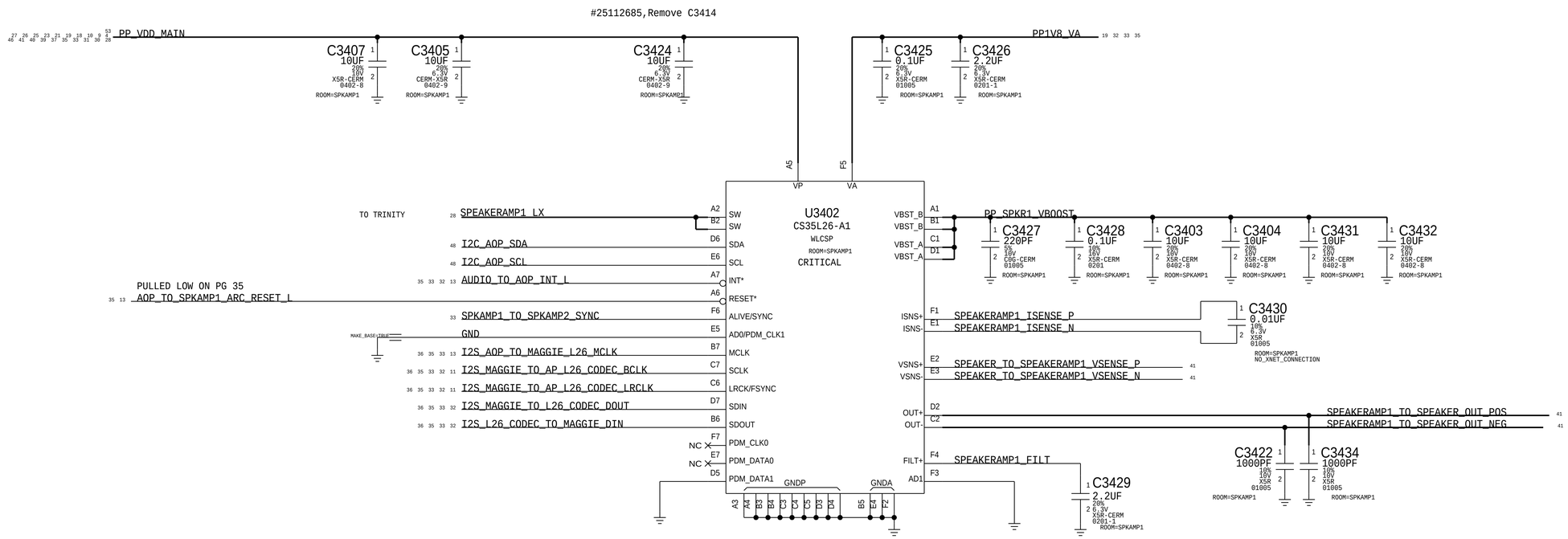


| | |
|---|---|
| PAGE TITLE | AUDIO:SPEAKER AMP 1 |
| Apple Inc. | DRAWING NUMBER 051-00482 SIZE D |
| | REVISION 8.0.0 |
| | BRANCH |
| | PAGE 34 OF 53 |
| | SHEET 34 OF 81 |


NOTICE OF PROPRIETARY PROPERTY:
THE INFORMATION CONTAINED HEREIN IS THE PROPRIETARY PROPERTY OF APPLE INC.
THE POSESSOR AGREES TO THE FOLLOWING:
I TO MAINTAIN THIS DOCUMENT IN CONFIDENCE
II NOT TO REPRODUCE OR COPY IT
III NOT TO REVEAL OR PUBLISH IT IN WHOLE OR PART
IV ALL RIGHTS RESERVED

# ARC DRIVER

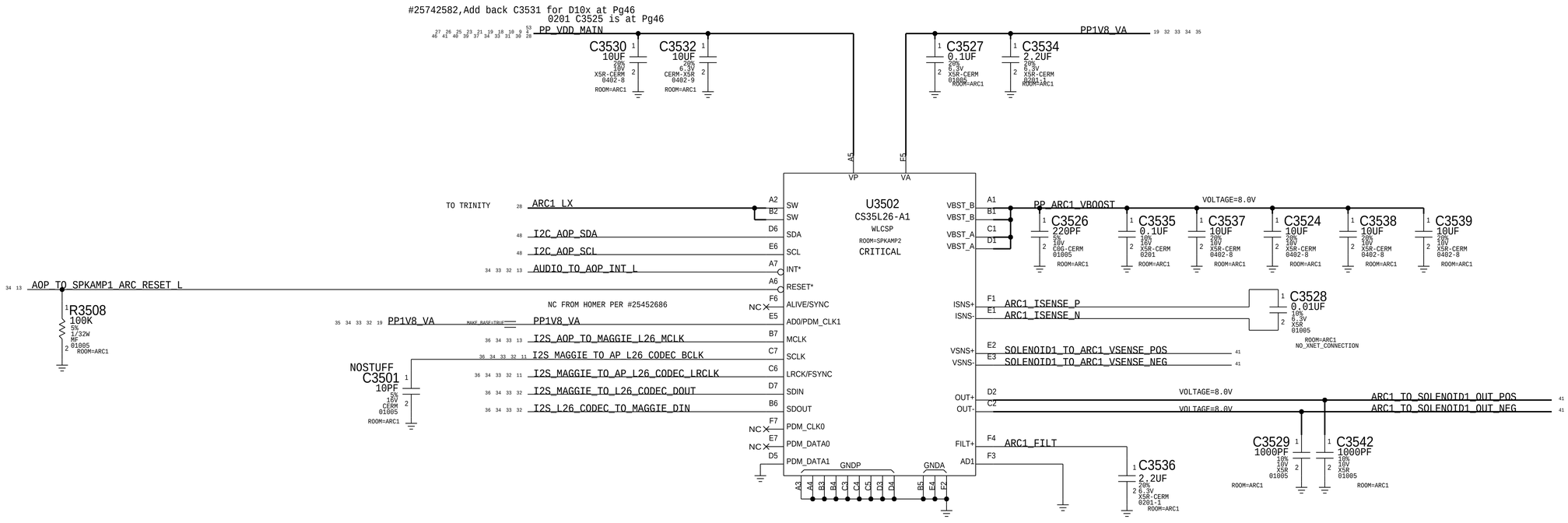


PAGE TITLE

ARC:DRIVER

Apple Inc.

DRAWING NUMBER 051-00482

SIZE D

REVISION 8.0.0

BRANCH

PAGE 35 OF 53

SHEET 35 OF 81

NOTICE OF PROPRIETARY PROPERTY:

THE INFORMATION CONTAINED HEREIN IS THE PROPRIETARY PROPERTY OF APPLE INC.
THE POSESSOR AGREES TO THE FOLLOWING:
I TO MAINTAIN THIS DOCUMENT IN CONFIDENCE
II NOT TO REPRODUCE OR COPY IT
III NOT TO REVEAL OR PUBLISH IT IN WHOLE OR PART
IV ALL RIGHTS RESERVED

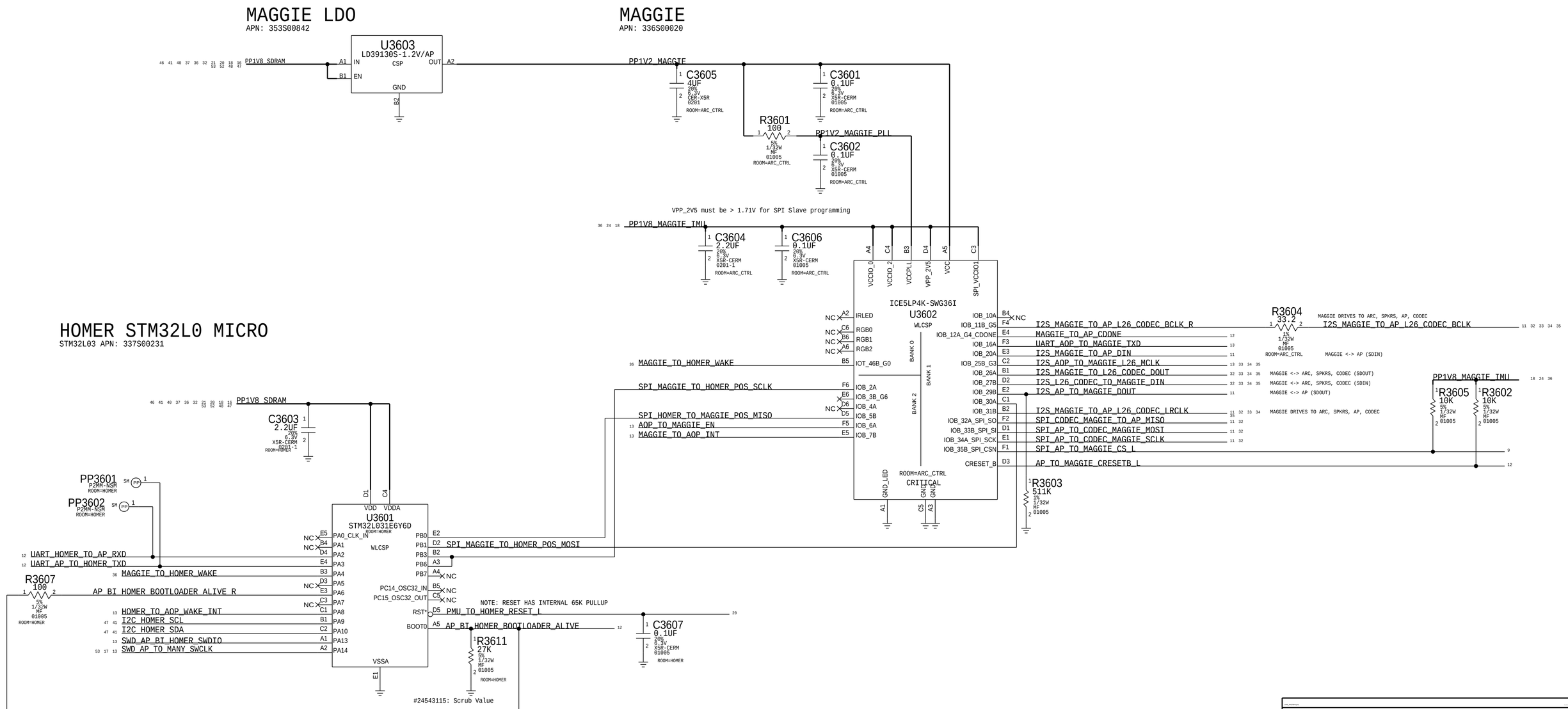


PAGE TITLE

# ARC:MAGGIE

Apple Inc.

| | |
|---|---|
| DRAWING NUMBER | 051-00482 |
| SIZE | D |
| REVISION | 8.0.0 |
| BRANCH | |
| PAGE | 36 OF 53 |
| SHEET | 36 OF 81 |

NOTICE OF PROPRIETARY PROPERTY:

THE INFORMATION CONTAINED HEREIN IS THE PROPRIETARY PROPERTY OF APPLE INC.
THE POSESSOR AGREES TO THE FOLLOWING:
I TO MAINTAIN THIS DOCUMENT IN CONFIDENCE
II NOT TO REPRODUCE OR COPY IT
III NOT TO REVEAL OR PUBLISH IT IN WHOLE OR PART
IV ALL RIGHTS RESERVED

# DISPLAY & TOUCH - POWER SUPPLIES

## CHESTNUT DISPLAY PMU

APN:338S1172

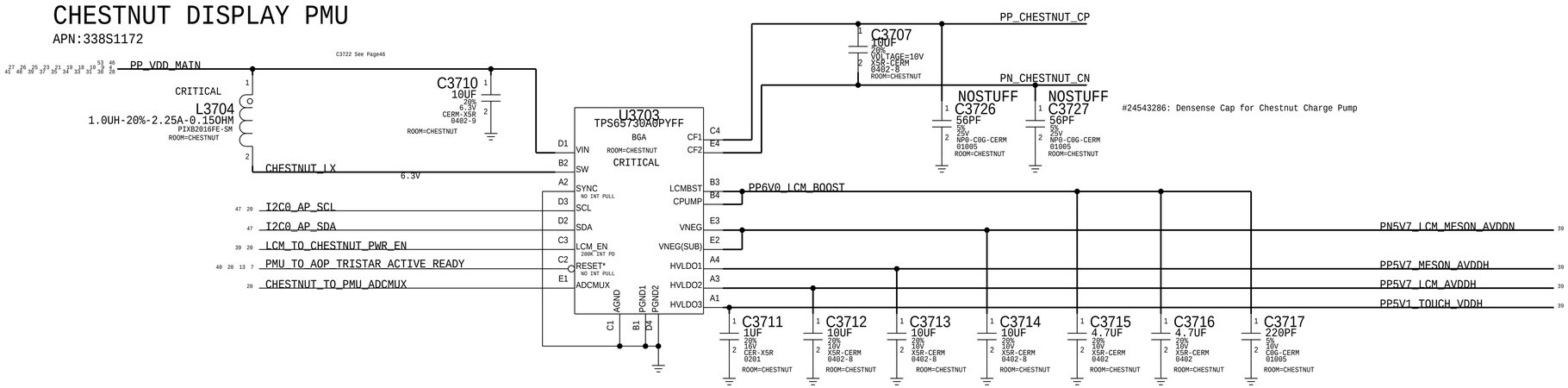


#26634069:D1x, C3715/C3716 to 138S0719 0402 4.7uF

## LED BACKLIGHT DRIVER - 6LED

APN:353s00640

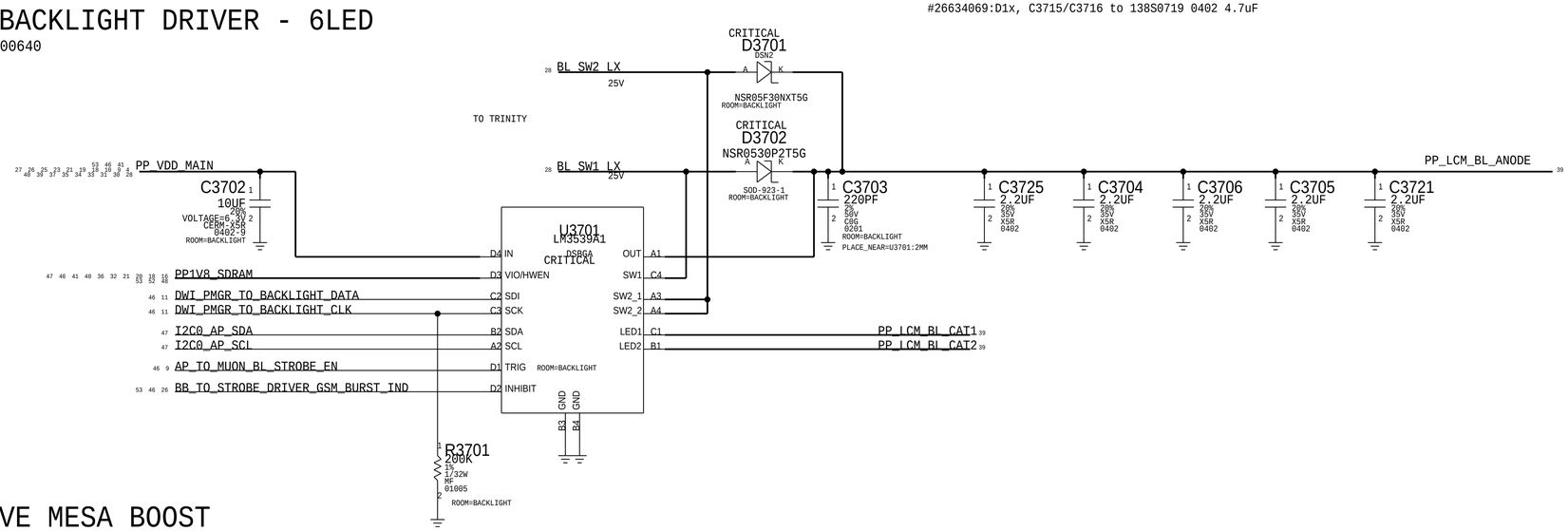


## MOJAVE MESA BOOST

APN:353S00671

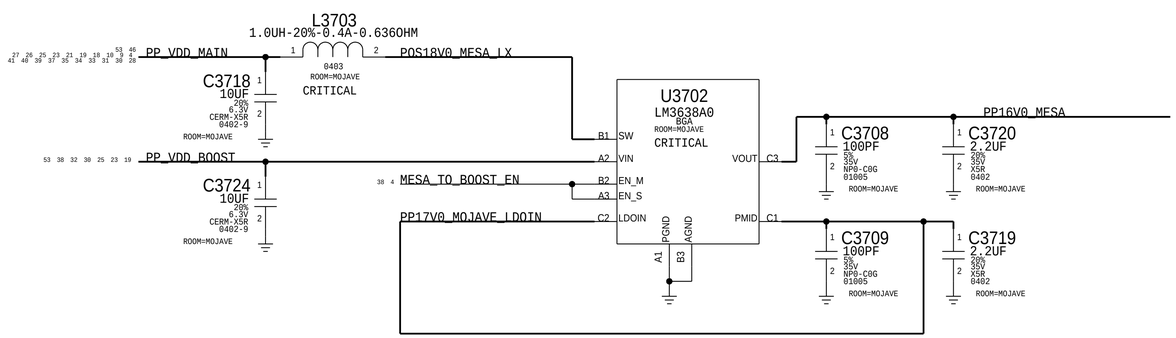


VIETMOBILE.VN

PAGE TITLE
DISPLAY & MESA:POWER

Apple Inc.

DRAWING NUMBER 051-00482 SIZE D
REVISION 8.0.0
BRANCH
PAGE 37 OF 53
SHEET 37 OF 81

NOTICE OF PROPRIETARY PROPERTY:
THE INFORMATION CONTAINED HEREIN IS THE PROPRIETARY PROPERTY OF APPLE INC.
THE POSESSOR AGREES TO THE FOLLOWING:
I TO MAINTAIN THIS DOCUMENT IN CONFIDENCE
II NOT TO REPRODUCE OR COPY IT
III NOT TO REVEAL OR PUBLISH IT IN WHOLE OR PART
IV ALL RIGHTS RESERVED

# MESA POWER

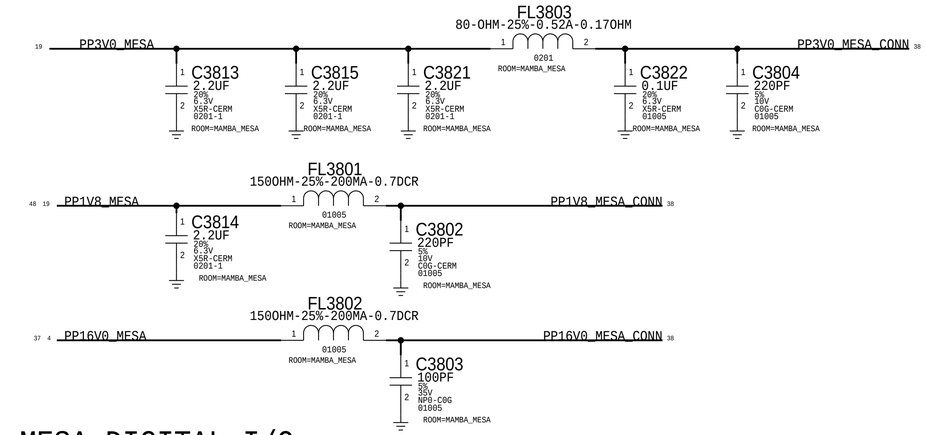


# MESA DIGITAL I/O

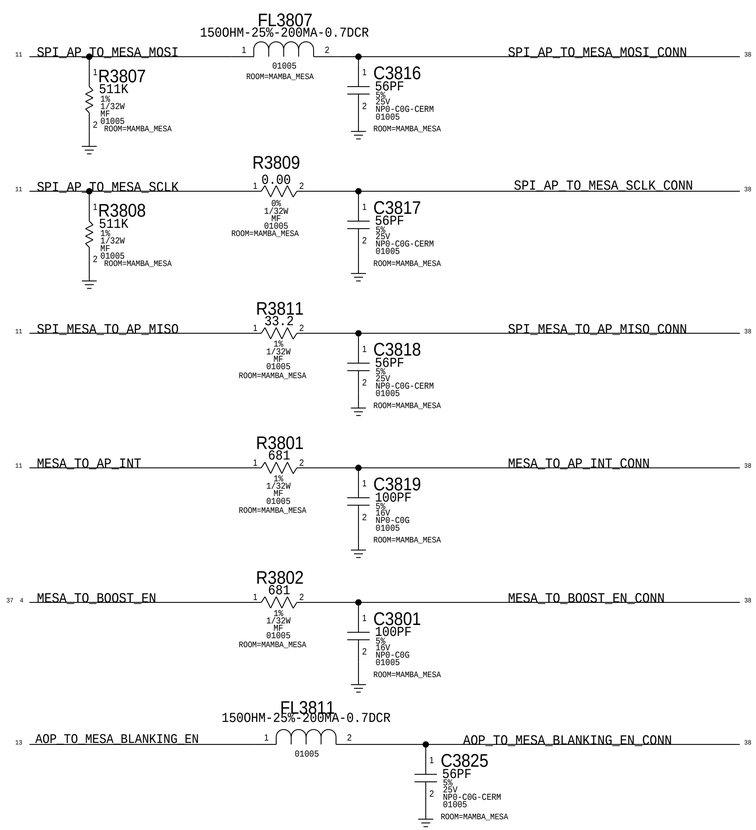


# MAMBA AND MESA CONNECTOR

MLB: 516S00141 (RCPT)
FLEX: 516S00142 (PLUG)

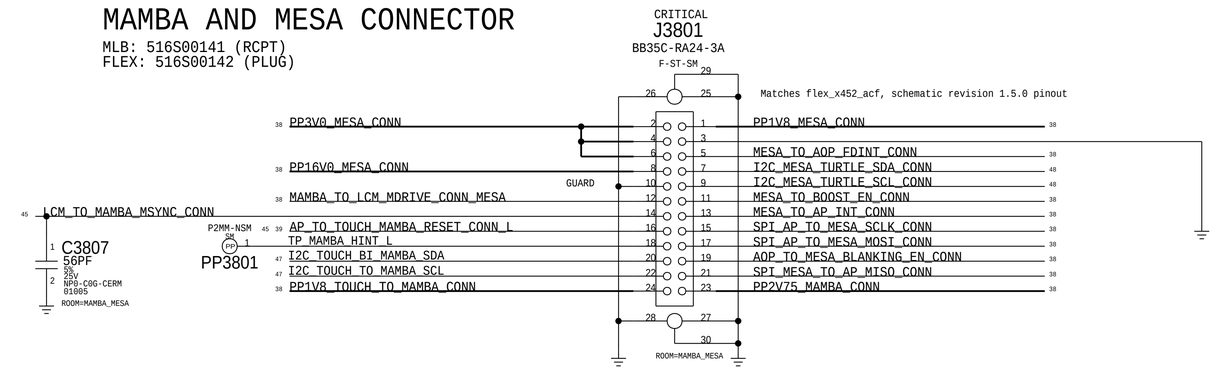


# MAMBA POWER

NOTE: OUTPUT IMPDEANCE MUST BE >0.005-OHM
IN ORDER TO MEET CAP ESR REQUIREMENT PER LDO SPEC.
VENDOR ALSO RECOMMENDS CIN 2 COUT FOR STABILITY

TI:353S00576
ST:353S00932

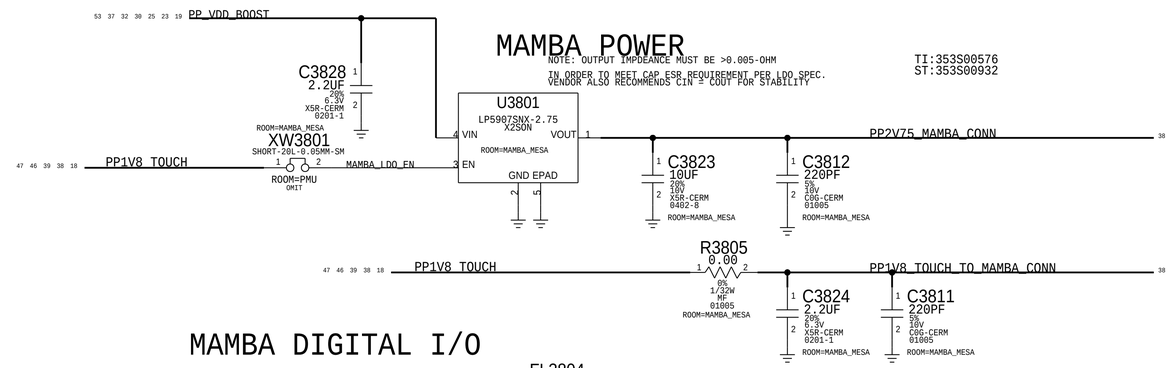


# MAMBA DIGITAL I/O

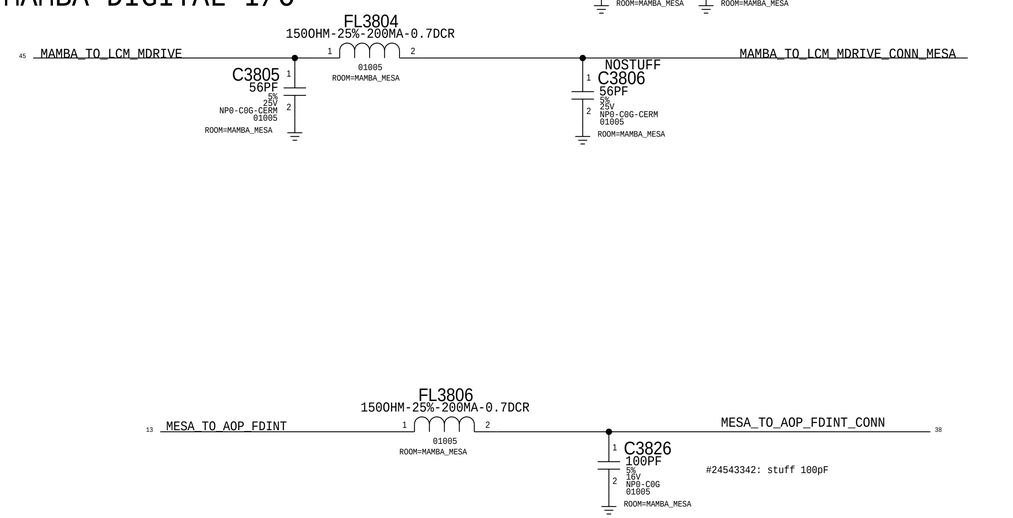


| | |
|---|---|
| PAGE TITLE | B2B:ORB & MESA |
| Apple Inc. | DRAWING NUMBER 051-00482 SIZE D |
| | REVISION 8.0.0 |
| NOTICE OF PROPRIETARY PROPERTY: | BRANCH |
| THE INFORMATION CONTAINED HEREIN IS THE PROPRIETARY PROPERTY OF APPLE INC. THE POSESSOR AGREES TO THE FOLLOWING: I TO MAINTAIN THIS DOCUMENT IN CONFIDENCE II NOT TO REPRODUCE OR COPY IT III NOT TO REVEAL OR PUBLISH IT IN WHOLE OR PART IV ALL RIGHTS RESERVED | PAGE 38 OF 53 |
| | SHEET 38 OF 81 |

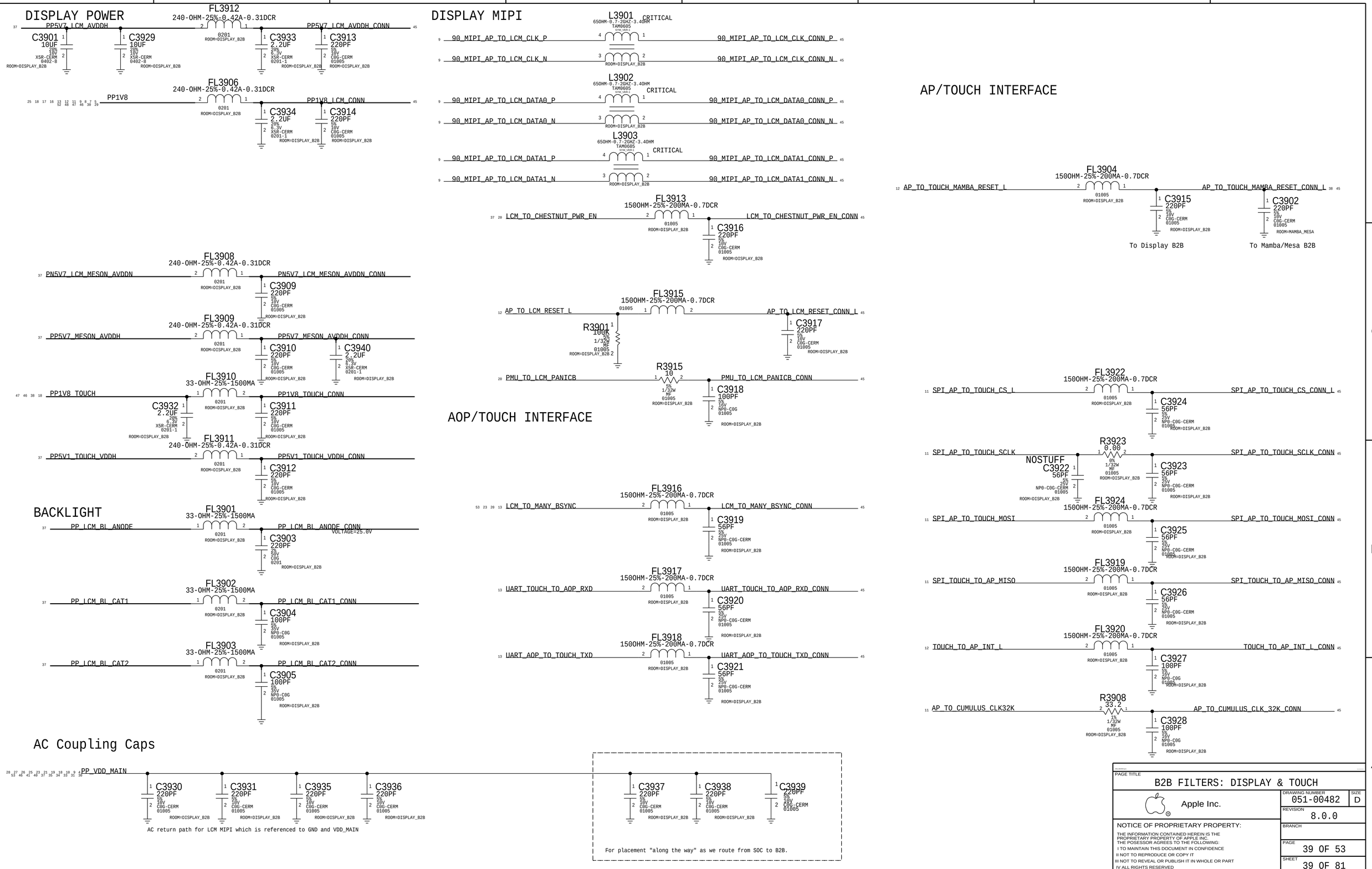
DISPLAY POWER
PP5V7_LCM_AVDDH
FL3912
240-OHM-25%-0.42A-0.31DCR
PP5V7_LCM_AVDDH_CONN
C3901 10UF 20% 10V X5R-CERM 0402-8 ROOM=DISPLAY_B2B
C3929 10UF 20% 10V X5R-CERM 0402-8 ROOM=DISPLAY_B2B
C3933 2.2UF 20% 6.3V X5R-CERM 0201-1 ROOM=DISPLAY_B2B
C3913 220PF 5% 10V C0G-CERM 01005 ROOM=DISPLAY_B2B
FL3906
240-OHM-25%-0.42A-0.31DCR
PP1V8
PP1V8_LCM_CONN
C3934 2.2UF 20% 6.3V X5R-CERM 0201-1 ROOM=DISPLAY_B2B
C3914 220PF 5% 10V C0G-CERM 01005 ROOM=DISPLAY_B2B
FL3908
240-OHM-25%-0.42A-0.31DCR
PN5V7_LCM_MESON_AVDDN
PN5V7_LCM_MESON_AVDDN_CONN
C3909 220PF 5% 10V C0G-CERM 01005 ROOM=DISPLAY_B2B
FL3909
240-OHM-25%-0.42A-0.31DCR
PP5V7_MESON_AVDDH
PP5V7_MESON_AVDDH_CONN
C3910 220PF 5% 10V C0G-CERM 01005 ROOM=DISPLAY_B2B
C3940 2.2UF 20% 6.3V X5R-CERM 0201-1 ROOM=DISPLAY_B2B
FL3910
33-OHM-25%-1500MA
PP1V8_TOUCH
PP1V8_TOUCH_CONN
C3932 2.2UF 20% 6.3V X5R-CERM 0201-1 ROOM=DISPLAY_B2B
C3911 220PF 5% 10V C0G-CERM 01005 ROOM=DISPLAY_B2B
FL3911
240-OHM-25%-0.42A-0.31DCR
PP5V1_TOUCH_VDDH
PP5V1_TOUCH_VDDH_CONN
C3912 220PF 5% 10V C0G-CERM 01005 ROOM=DISPLAY_B2B
BACKLIGHT
FL3901
33-OHM-25%-1500MA
PP_LCM_BL_ANODE
PP_LCM_BL_ANODE_CONN
VOLTAGE=25.0V
C3903 220PF 2% 50V C0G 0201 ROOM=DISPLAY_B2B
FL3902
33-OHM-25%-1500MA
PP_LCM_BL_CAT1
PP_LCM_BL_CAT1_CONN
C3904 100PF 5% 35V NP0-C0G 01005 ROOM=DISPLAY_B2B
FL3903
33-OHM-25%-1500MA
PP_LCM_BL_CAT2
PP_LCM_BL_CAT2_CONN
C3905 100PF 5% 35V NP0-C0G 01005 ROOM=DISPLAY_B2B
AC Coupling Caps
PP_VDD_MAIN
C3930 220PF 5% 10V C0G-CERM 01005 ROOM=DISPLAY_B2B
C3931 220PF 5% 10V C0G-CERM 01005 ROOM=DISPLAY_B2B
C3935 220PF 5% 10V C0G-CERM 01005 ROOM=DISPLAY_B2B
C3936 220PF 5% 10V C0G-CERM 01005 ROOM=DISPLAY_B2B
AC return path for LCM MIPI which is referenced to GND and VDD_MAIN
C3937 220PF 5% 10V C0G-CERM 01005 ROOM=DISPLAY_B2B
C3938 220PF 5% 10V C0G-CERM 01005 ROOM=DISPLAY_B2B
C3939 220PF 5% 10V C0G-CERM 01005
For placement "along the way" as we route from SOC to B2B.
DISPLAY MIPI
L3901 CRITICAL
650HM-0.7-2GHZ-3.40HM TAM0605
90_MIPI_AP_TO_LCM_CLK_P
90_MIPI_AP_TO_LCM_CLK_CONN_P
90_MIPI_AP_TO_LCM_CLK_N
90_MIPI_AP_TO_LCM_CLK_CONN_N
L3902 CRITICAL
650HM-0.7-2GHZ-3.40HM TAM0605
90_MIPI_AP_TO_LCM_DATA0_P
90_MIPI_AP_TO_LCM_DATA0_CONN_P
90_MIPI_AP_TO_LCM_DATA0_N
90_MIPI_AP_TO_LCM_DATA0_CONN_N
L3903 CRITICAL
650HM-0.7-2GHZ-3.4OHM TAM0605
90_MIPI_AP_TO_LCM_DATA1_P
90_MIPI_AP_TO_LCM_DATA1_CONN_P
90_MIPI_AP_TO_LCM_DATA1_N
90_MIPI_AP_TO_LCM_DATA1_CONN_N
FL3913
150OHM-25%-200MA-0.7DCR
LCM_TO_CHESTNUT_PWR_EN
LCM_TO_CHESTNUT_PWR_EN_CONN
C3916 220PF 5% 10V C0G-CERM 01005 ROOM=DISPLAY_B2B
FL3915
150OHM-25%-200MA-0.7DCR
AP_TO_LCM_RESET_L
AP_TO_LCM_RESET_CONN_L
R3901 100K 5% 1/32W MF 01005 ROOM=DISPLAY_B2B
C3917 220PF 5% 10V C0G-CERM 01005 ROOM=DISPLAY_B2B
R3915 10 5% 1/32W MF 01005 ROOM=DISPLAY_B2B
PMU_TO_LCM_PANICB
PMU_TO_LCM_PANICB_CONN
C3918 100PF 5% 10V NP0-C0G 01005 ROOM=DISPLAY_B2B
AOP/TOUCH INTERFACE
FL3916
150OHM-25%-200MA-0.7DCR
LCM_TO_MANY_BSYNC
LCM_TO_MANY_BSYNC_CONN
C3919 56PF 5% 25V NP0-C0G-CERM 01005 ROOM=DISPLAY_B2B
FL3917
150OHM-25%-200MA-0.7DCR
UART_TOUCH_TO_AOP_RXD
UART_TOUCH_TO_AOP_RXD_CONN
C3920 56PF 5% 25V NP0-C0G-CERM 01005 ROOM=DISPLAY_B2B
FL3918
150OHM-25%-200MA-0.7DCR
UART_AOP_TO_TOUCH_TXD
UART_AOP_TO_TOUCH_TXD_CONN
C3921 56PF 5% 25V NP0-C0G-CERM 01005 ROOM=DISPLAY_B2B
AP/TOUCH INTERFACE
FL3904
150OHM-25%-200MA-0.7DCR
AP_TO_TOUCH_MAMBA_RESET_L
AP_TO_TOUCH_MAMBA_RESET_CONN_L
C3915 220PF 5% 10V C0G-CERM 01005 ROOM=DISPLAY_B2B
C3902 220PF 5% 10V C0G-CERM 01005 ROOM=MAMBA_MESA
To Display B2B
To Mamba/Mesa B2B
FL3922
150OHM-25%-200MA-0.7DCR
SPI_AP_TO_TOUCH_CS_L
SPI_AP_TO_TOUCH_CS_CONN_L
C3924 56PF 5% 25V NP0-C0G-CERM 01005 ROOM=DISPLAY_B2B
R3923 0.00 0% 1/32W MF 01005 ROOM=DISPLAY_B2B
SPI_AP_TO_TOUCH_SCLK
SPI_AP_TO_TOUCH_SCLK_CONN
NOSTUFF
C3922 56PF 5% 25V NP0-C0G-CERM 01005 ROOM=DISPLAY_B2B
C3923 56PF 5% 25V NP0-C0G-CERM 01005 ROOM=DISPLAY_B2B
FL3924
150OHM-25%-200MA-0.7DCR
SPI_AP_TO_TOUCH_MOSI
SPI_AP_TO_TOUCH_MOSI_CONN
C3925 56PF 5% 25V NP0-C0G-CERM 01005 ROOM=DISPLAY_B2B
FL3919
150OHM-25%-200MA-0.7DCR
SPI_TOUCH_TO_AP_MISO
SPI_TOUCH_TO_AP_MISO_CONN
C3926 56PF 5% 25V NP0-C0G-CERM 01005 ROOM=DISPLAY_B2B
FL3920
150OHM-25%-200MA-0.7DCR
TOUCH_TO_AP_INT_L
TOUCH_TO_AP_INT_L_CONN
C3927 100PF 5% 16V NP0-C0G 01005 ROOM=DISPLAY_B2B
R3908 33.2 1% 1/32W MF 01005 ROOM=DISPLAY_B2B
AP_TO_CUMULUS_CLK32K
AP_TO_CUMULUS_CLK_32K_CONN
C3928 100PF 5% 16V NP0-C0G 01005 ROOM=DISPLAY_B2B
PAGE TITLE
B2B FILTERS: DISPLAY & TOUCH
Apple Inc.
DRAWING NUMBER 051-00482
SIZE D
REVISION 8.0.0
BRANCH
PAGE 39 OF 53
SHEET 39 OF 81
NOTICE OF PROPRIETARY PROPERTY:
THE INFORMATION CONTAINED HEREIN IS THE PROPRIETARY PROPERTY OF APPLE INC.
THE POSESSOR AGREES TO THE FOLLOWING:
I TO MAINTAIN THIS DOCUMENT IN CONFIDENCE
II NOT TO REPRODUCE OR COPY IT
III NOT TO REVEAL OR PUBLISH IT IN WHOLE OR PART
IV ALL RIGHTS RESERVED

# TRISTAR 2

z=0.45mm

<rdar:/24285280> EVT: 343S00091 (P2:343S00078)

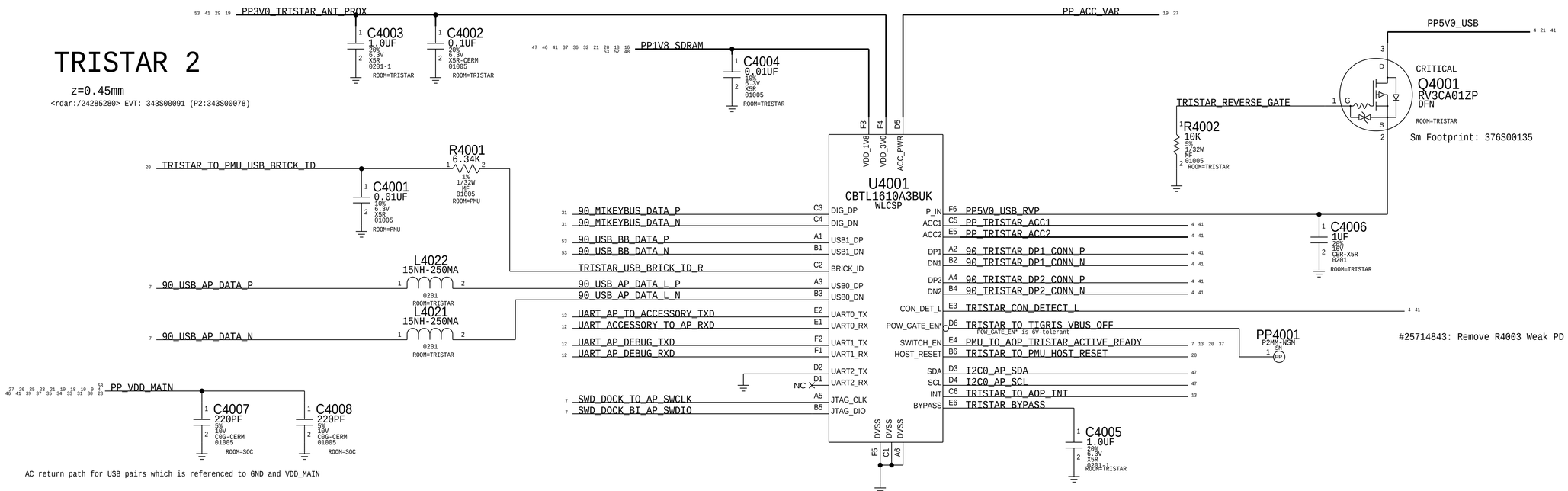


AC return path for USB pairs which is referenced to GND and VDD_MAIN

#25714843: Remove R4003 Weak PD

PAGE TITLE: TRISTAR 2

Apple Inc.

DRAWING NUMBER: 051-00482 SIZE: D

REVISION: 8.0.0

BRANCH

PAGE: 40 OF 53

SHEET: 40 OF 81

NOTICE OF PROPRIETARY PROPERTY:
THE INFORMATION CONTAINED HEREIN IS THE PROPRIETARY PROPERTY OF APPLE INC.
THE POSESSOR AGREES TO THE FOLLOWING:
I TO MAINTAIN THIS DOCUMENT IN CONFIDENCE
II NOT TO REPRODUCE OR COPY IT
III NOT TO REVEAL OR PUBLISH IT IN WHOLE OR PART
IV ALL RIGHTS RESERVED

# ANTENNA

Please loop in Matt Mow (Antenna Team)
when changing these components!

FL4103
150OHM-25%-200MA-0.7DCR
01005
ROOM=DOCK_B2B

PP3V0_LAT_CONN

C4134
220PF
5%
10V
C0G-CERM
01005
ROOM=DOCK_B2B

FL4107
150OHM-25%-200MA-0.7DCR
01005
ROOM=DOCK_B2B

53 40 29 19 PP3V0_TRISTAR_ANT_PROX

PP3V0_LAT1_CONN 41
VOLTAGE=3.0V

C4119
220PF
5%
10V
C0G-CERM
01005
ROOM=DOCK_B2B

FL4108
150OHM-25%-200MA-0.7DCR
01005
ROOM=DOCK_B2B

PP1V8_SDRAM

PP1V8_LAT_ARC_CONN 41

C4120
220PF
5%
10V
C0G-CERM
01005
ROOM=DOCK_B2B

53 BB_TO_LAT_ANT_SCLK

R4109
0.00
0%
1/32W
MF
01005
ROOM=DOCK_B2B

BB_TO_LAT_ANT_SCLK_CONN 41

C4121
33PF
5%
16V
NP0-C0G-CERM
01005
ROOM=DOCK_B2B

53 BB_TO_LAT_ANT_DATA

R4110
0.00
0%
1/32W
MF
01005
ROOM=DOCK_B2B

BB_TO_LAT_ANT_DATA_CONN 41

C4122
33PF
5%
16V
NP0-C0G-CERM
01005
ROOM=DOCK_B2B

# ARC CONTROL

#26118161: Update FL4104 to 49.9ohm

47 36 I2C_HOMER_SCL

R4104
49.9
1%
1/32W
MF
01005
ROOM=DOCK_B2B

I2C_HOMER_SCL_CONN 41
CKPLUS_WAIVE=I2C_PULLUP

C4135
56PF
5%
25V
NP0-C0G-CERM
01005
ROOM=DOCK_B2B

FL4112
150OHM-25%-200MA-0.7DCR
01005

47 36 I2C_HOMER_SDA

I2C_HOMER_SDA_CONN 41
CKPLUS_WAIVE=I2C_PULLUP

C4136
56PF
5%
25V
NP0-C0G-CERM
01005
ROOM=DOCK_B2B

# ARC1

41 35 ARC1_TO_SOLENOID1_OUT_POS

41 35 ARC1_TO_SOLENOID1_OUT_NEG

C4101
220PF
5%
10V
C0G-CERM
01005
ROOM=DOCK_B2B

C4102
220PF
5%
10V
C0G-CERM
01005
ROOM=DOCK_B2B

# Antenna GPIO

FL4101
150OHM-25%-200MA-0.7DCR
01005
ROOM=DOCK_B2B

53 BB_TO_LAT_GPO1

BB_TO_LAT_GPO1_CONN 41

C4110
56PF
5%
25V
NP0-C0G-CERM
01005
ROOM=DOCK_B2B

FL4102
150OHM-25%-200MA-0.7DCR
01005
ROOM=DOCK_B2B

53 BB_TO_LAT_GPO2

BB_TO_LAT_GPO2_CONN 41

C4111
56PF
5%
25V
NP0-C0G-CERM
01005
ROOM=DOCK_B2B

Per ANT Erdinc, change to cap

# LOWER MIC1/4

FL4116
150OHM-25%-200MA-0.7DCR
01005
ROOM=DOCK_B2B

31 LOWERMIC1_TO_CODEC_AIN1_P

LOWERMIC1_TO_CODEC_AIN1_CONN_POS 41

C4128
56PF
5%
25V
NP0-C0G-CERM
01005
ROOM=DOCK_B2B

FL4117
150OHM-25%-200MA-0.7DCR
01005
ROOM=DOCK_B2B

31 LOWERMIC1_TO_CODEC_AIN1_N

LOWERMIC1_TO_CODEC_AIN1_CONN_NEG 41

C4129
56PF
5%
25V
NP0-C0G-CERM
01005
ROOM=DOCK_B2B

FL4118
150OHM-25%-200MA-0.7DCR
01005
ROOM=DOCK_B2B

32 PP_CODEC_TO_LOWERMIC1_BIAS

PP_CODEC_TO_LOWERMIC1_BIAS_CONN 41

C4130
220PF
5%
10V
C0G-CERM
01005
ROOM=DOCK_B2B

FL4119
150OHM-25%-200MA-0.7DCR
01005
ROOM=DOCK_B2B

31 LOWERMIC4_TO_CODEC_AIN2_P

LOWERMIC4_TO_CODEC_AIN2_CONN_POS 41

C4131
56PF
5%
25V
NP0-C0G-CERM
01005
ROOM=DOCK_B2B

FL4120
150OHM-25%-200MA-0.7DCR
01005
ROOM=DOCK_B2B

31 LOWERMIC4_TO_CODEC_AIN2_N

LOWERMIC4_TO_CODEC_AIN2_CONN_NEG 41

C4132
56PF
5%
25V
NP0-C0G-CERM
01005
ROOM=DOCK_B2B

FL4121
150OHM-25%-200MA-0.7DCR
01005
ROOM=DOCK_B2B

32 PP_CODEC_TO_LOWERMIC4_BIAS

PP_CODEC_TO_LOWERMIC4_BIAS_CONN 41

C4133
220PF
5%
10V
C0G-CERM
01005
ROOM=DOCK_B2B

# SPEAKER1

FL4114
150OHM-25%-200MA-0.7DCR
01005
ROOM=DOCK_B2B

34 SPEAKER_TO_SPEAKERAMP1_VSENSE_P

SPEAKER_TO_SPEAKERAMP1_VSENSE_CONN_POS 41

C4126
220PF
5%
10V
C0G-CERM
01005
ROOM=DOCK_B2B

FL4115
150OHM-25%-200MA-0.7DCR
01005
ROOM=DOCK_B2B

34 SPEAKER_TO_SPEAKERAMP1_VSENSE_N

SPEAKER_TO_SPEAKERAMP1_VSENSE_CONN_NEG 41

C4127
220PF
5%
10V
C0G-CERM
01005
ROOM=DOCK_B2B

41 34 SPEAKERAMP1_TO_SPEAKER_OUT_POS

C4103
220PF
5%
10V
C0G-CERM
01005
ROOM=DOCK_B2B

41 34 SPEAKERAMP1_TO_SPEAKER_OUT_NEG

C4104
220PF
5%
10V
C0G-CERM
01005
ROOM=DOCK_B2B

VOLTAGE=16.0V

40 21 4 PP5V0_USB

C4109
0.1UF
10%
25V
X5R
0201
ROOM=DOCK_B2B

C4105
0.1UF
10%
25V
X5R
0201
ROOM=DOCK_B2B

C4106
0.1UF
10%
25V
X5R
0201
ROOM=DOCK_B2B

C4107
330PF
10%
16V
CER-X7R
01005
ROOM=DOCK_B2B

C4108
56PF
5%
25V
NP0-C0G-CERM
01005
ROOM=DOCK_B2B

J4101
245857
F-ST-SM

53 49 50

#25429221:Carrier Dock flex to add +1 ACC2 pin

| | | | | |
|---|---|---|---|---|
| 41 34 SPEAKERAMP1_TO_SPEAKER_OUT_NEG | 1 | 2 | | |
| 41 SPEAKER_TO_SPEAKERAMP1_VSENSE_CONN_NEG | 3 | 4 | | |
| 46 BB_TO_LAT_GPO3_CONN | 5 | 6 | PP_TRISTAR_ACC2_CONN | 41 |
| 41 LOWERMIC4_TO_CODEC_AIN2_CONN_NEG | 7 | 8 | BB_TO_LAT_GPO2_CONN | 41 |
| 41 PP_CODEC_TO_LOWERMIC4_BIAS_CONN | 9 | 10 | LOWERMIC4_TO_CODEC_AIN2_CONN_POS | 41 |
| 41 PP_TRISTAR_ACC1_CONN | 11 | 12 | LOWERMIC4_TO_CODEC_BIAS_FILT_RET | 32 |
| #22499940:Change Net Name to POS/NEG | 13 | 14 | BB_TO_LAT_GPO1_CONN | 41 |
| 40 4 90_TRISTAR_DP2_CONN_P | 15 | 16 | BB_TO_LAT_ANT_SCLK_CONN | 41 |
| 40 4 90_TRISTAR_DP2_CONN_N | 17 | 18 | BB_TO_LAT_ANT_DATA_CONN | 41 |
| | 19 | 20 | PP1V8_LAT_ARC_CONN | 41 |
| 40 4 90_TRISTAR_DP1_CONN_N | 21 | 22 | PP3V0_LAT1_CONN | 41 |
| 40 4 90_TRISTAR_DP1_CONN_P | 23 | 24 | | |
| | 25 | 26 | | |
| 31 MIKEYBUS_REFERENCE | 27 | 28 | | |
| 41 LOWERMIC1_TO_CODEC_AIN1_CONN_POS | 29 | 30 | LOWERMIC1_TO_CODEC_AIN1_CONN_NEG | 41 |
| 32 LOWERMIC1_TO_CODEC_BIAS_FILT_RET | 31 | 32 | PP_CODEC_TO_LOWERMIC1_BIAS_CONN | 41 |
| | 33 | 34 | TRISTAR_CON_DETECT_CONN_L | 41 |
| 47 I2C_MIC1_SDA_CONN | 35 | 36 | | |
| 47 I2C_MIC1_SCL_CONN | 37 | 38 | | |
| | 39 | 40 | ARC1_TO_SOLENOID1_OUT_NEG | 35 41 |
| 41 35 ARC1_TO_SOLENOID1_OUT_POS | 41 | 42 | ARC1_TO_SOLENOID1_OUT_POS | 35 41 |
| 35 SOLENOID1_TO_ARC1_VSENSE_POS | 43 | 44 | SOLENOID1_TO_ARC1_VSENSE_NEG | 35 |
| 41 PP3V0_LAT_CONN | 45 | 46 | I2C_HOMER_SDA_CONN | 41 |
| 41 SPEAKER_TO_SPEAKERAMP1_VSENSE_CONN_POS | 47 | 48 | I2C_HOMER_SCL_CONN | 41 |
| 41 34 SPEAKERAMP1_TO_SPEAKER_OUT_POS | 51 | 52 | | |
| | 54 | | | |

# DOCK FLEX CONNECTOR

# TRISTAR

40 4 TRISTAR_CON_DETECT_L

R4102
1.00K
5%
1/32W
MF
01005
ROOM=DOCK_B2B

TRISTAR_CON_DETECT_CONN_L 41

C4116
27PF
5%
16V
NP0-C0G
01005
ROOM=DOCK_B2B

FL4105
10-OHM-1.1A
01005
ROOM=DOCK_B2B

40 4 PP_TRISTAR_ACC1

PP_TRISTAR_ACC1_CONN 41
VOLTAGE=4.3V

C4117
100PF
5%
16V
NP0-C0G
01005
ROOM=DOCK_B2B

FL4106
22-OHM-25%-1800MA
0201
ROOM=DOCK_B2B
#25098110: Decrease DCR

40 4 PP_TRISTAR_ACC2

PP_TRISTAR_ACC2_CONN 41
VOLTAGE=4.3V

C4118
100PF
5%
16V
NP0-C0G
01005
ROOM=DOCK_B2B

# USB AC Coupling

AC return path for USB pairs which is referenced to GND and VDD_MAIN

27 26 25 23 21 19 18 10 3 4
46 40 39 37 35 34 33 31 30 29

53 PP_VDD_MAIN

C4143
220PF
5%
10V
C0G-CERM
01005
ROOM=DOCK

PAGE TITLE

B2B:DOCK FLEX

Apple Inc.

DRAWING NUMBER 051-00482

SIZE D

REVISION 8.0.0

BRANCH

PAGE 41 OF 53

SHEET 41 OF 81

NOTICE OF PROPRIETARY PROPERTY:
THE INFORMATION CONTAINED HEREIN IS THE PROPRIETARY PROPERTY OF APPLE INC.
THE POSESSOR AGREES TO THE FOLLOWING:
I TO MAINTAIN THIS DOCUMENT IN CONFIDENCE
II NOT TO REPRODUCE OR COPY IT
III NOT TO REVEAL OR PUBLISH IT IN WHOLE OR PART
IV ALL RIGHTS RESERVED

PAGE TITLE

spare

Apple Inc.

| | |
|---|---|
| DRAWING NUMBER | 051-00482 |
| SIZE | D |
| REVISION | 8.0.0 |
| BRANCH | |
| PAGE | 42 OF 53 |
| SHEET | 42 OF 81 |

NOTICE OF PROPRIETARY PROPERTY:

THE INFORMATION CONTAINED HEREIN IS THE PROPRIETARY PROPERTY OF APPLE INC.
THE POSESSOR AGREES TO THE FOLLOWING:

I TO MAINTAIN THIS DOCUMENT IN CONFIDENCE

II NOT TO REPRODUCE OR COPY IT

III NOT TO REVEAL OR PUBLISH IT IN WHOLE OR PART

IV ALL RIGHTS RESERVED

PAGE TITLE

spare

Apple Inc.

| | |
|---|---|
| DRAWING NUMBER | 051-00482 |
| SIZE | D |
| REVISION | 8.0.0 |
| BRANCH | |
| PAGE | 43 OF 53 |
| SHEET | 43 OF 81 |

NOTICE OF PROPRIETARY PROPERTY:

THE INFORMATION CONTAINED HEREIN IS THE PROPRIETARY PROPERTY OF APPLE INC.
THE POSESSOR AGREES TO THE FOLLOWING:

I TO MAINTAIN THIS DOCUMENT IN CONFIDENCE

II NOT TO REPRODUCE OR COPY IT

III NOT TO REVEAL OR PUBLISH IT IN WHOLE OR PART

IV ALL RIGHTS RESERVED

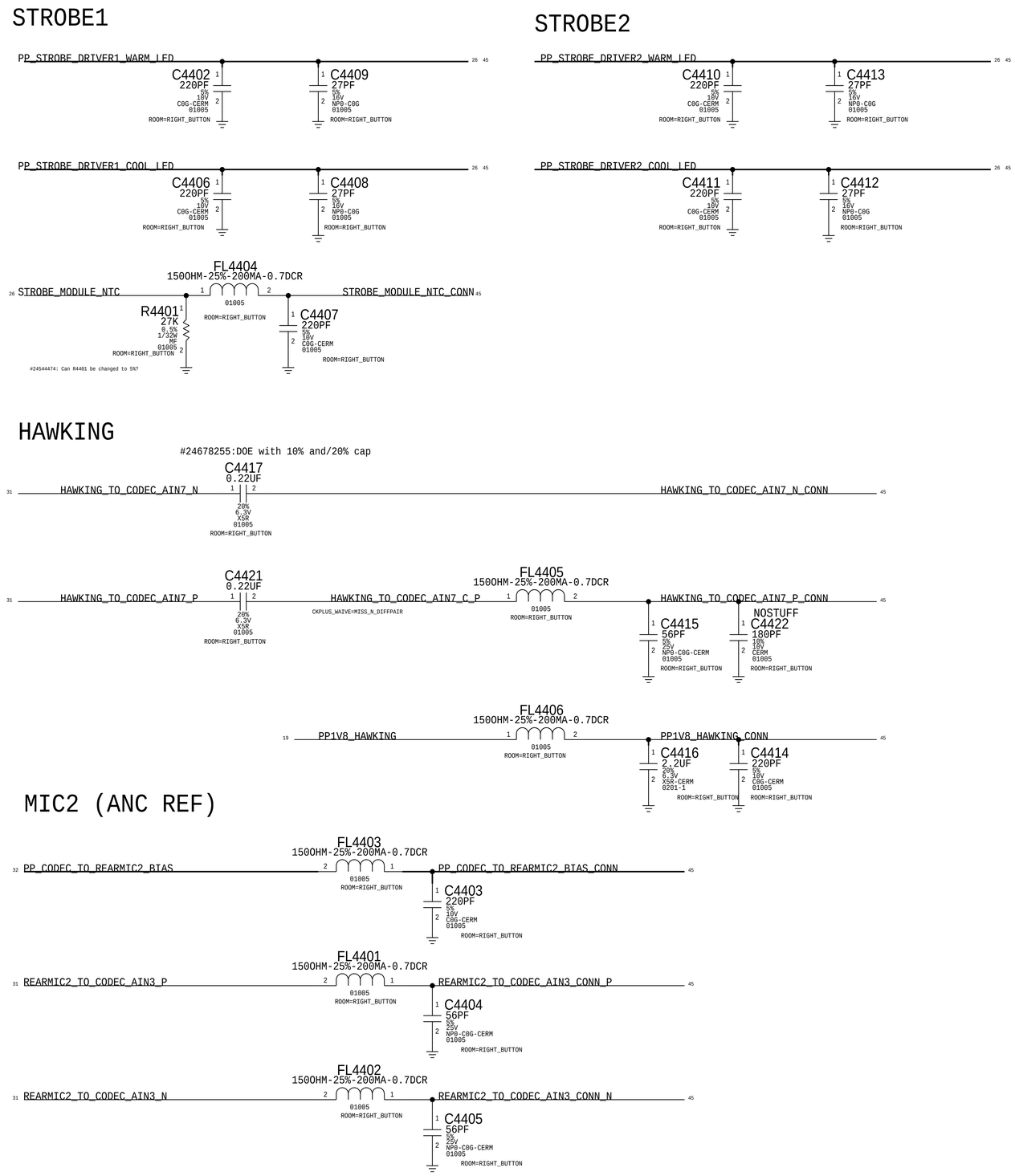


PAGE TITLE

B2B FILTERS: RIGHT BUTTON FLEX

Apple Inc.

DRAWING NUMBER 051-00482 SIZE D

REVISION 8.0.0

BRANCH

PAGE 44 OF 53

SHEET 44 OF 81

NOTICE OF PROPRIETARY PROPERTY:

THE INFORMATION CONTAINED HEREIN IS THE PROPRIETARY PROPERTY OF APPLE INC.
THE POSESSOR AGREES TO THE FOLLOWING:
I TO MAINTAIN THIS DOCUMENT IN CONFIDENCE
II NOT TO REPRODUCE OR COPY IT
III NOT TO REVEAL OR PUBLISH IT IN WHOLE OR PART
IV ALL RIGHTS RESERVED

# UTAH-D FLEX CONNECTOR

516S00152 RCPT (USED ON MLB) <-- THIS ONE
516S00151 PLUG

J4501
AA26D-S022VA1
F-ST-SM
ROOM=RCAM_B2B

| Pin | Net | Pin | Net |
|---|---|---|---|
| 25 PP3V0_UT_SVDD_CONN | 2 | 1 | 90_LPDP_UT_TO_AP_D2_CONN_N 25 |
| 25 LPDP_UT_BI_AP_AUX_CONN | 4 | 3 | 90_LPDP_UT_TO_AP_D2_CONN_P 25 |
| 25 AP_TO_UT_SHUTDOWN_CONN_L | 6 | 5 | |
| 30 25 UT_AND_NV_TO_LED_DRIVER_STROBE_EN_CONN | 8 | 7 | 90_LPDP_UT_TO_AP_D3_CONN_N 25 |
| 39 UT_TO_NV_SYNC_J2501_CONN | 10 | 9 | 90_LPDP_UT_TO_AP_D3_CONN_P 25 |
| 25 PP1V8_UT_CONN | 12 | 11 | |
| 48 I2C_UT_SDA_CONN | 14 | 13 | AP_TO_UT_CLK_CONN 25 |
| 48 I2C_UT_SCL_CONN | 16 | 15 | |
| | 18 | 17 | PP2V9_UT_AVDD_CONN 25 46 |
| 25 PP2V8_UT_AF_VAR_CONN | 20 | 19 | |
| | 22 | 21 | |
| 25 PP1V2_UT_VDD_CONN | 26 | 25 | |

# DISPLAY / TOUCH FLEX CONNECTOR

MLB: 516S00050

J4502
BB35C-RA48-3A
F-ST-SM

R4501
200
1%
1/32W
MF
01005
ROOM=DISPLAY_B2B

47 I2C_TOUCH_TO_MAMBA_SCL

C4507
56PF
5%
25V
NP0-C0G-CERM
01005
ROOM=DISPLAY_B2B

PP4501
P2MM-NSM
SM
PP

| Pin | Net | Pin | Net |
|---|---|---|---|
| 38 MAMBA_TO_LCM_MDRIVE | 1 | 2 | I2C_DISP_EEPROM_SCL_CONN 47 CKPLUS_WAIVE=I2C_PULLUP |
| 47 I2C_DISP_EEPROM_SDA_CONN CKPLUS_WAIVE=I2C_PULLUP | 3 | 4 | I2C_TOUCH_BI_MAMBA_SDA 47 |
| I2C_TOUCH_SCL_CONN | 5 | 6 | SPI_AP_TO_TOUCH_MOSI_CONN 39 |
| 39 SPI_TOUCH_TO_AP_MISO_CONN | 7 | 8 | TOUCH_TO_AP_INT_L_CONN 39 |
| 39 SPI_AP_TO_TOUCH_CS_CONN_L | 9 | 10 | AP_TO_TOUCH_MAMBA_RESET_CONN_L 38 39 |
| 39 AP_TO_CUMULUS_CLK_32K_CONN | 11 | 12 | Per #25048465:No Satin flex support in CRB |
| 39 SPI_AP_TO_TOUCH_SCLK_CONN | 13 | 14 | UART_AOP_TO_TOUCH_TXD_CONN 39 |
| 39 UART_TOUCH_TO_AOP_RXD_CONN | 15 | 16 | PMU_TO_LCM_PANICB_CONN 39 |
| 39 AP_TO_LCM_RESET_CONN_L | 17 | 18 | PP1V8_LCM_CONN 39 |
| 39 PP5V1_TOUCH_VDDH_CONN | 19 | 20 | PP5V7_LCM_AVDDH_CONN 39 |
| 39 PP1V8_TOUCH_CONN | 21 | 22 | LCM_TO_CHESTNUT_PWR_EN_CONN 39 |
| 39 PN5V7_LCM_MESON_AVDDN_CONN | 23 | 24 | LCM_TO_MANY_BSYNC_CONN 39 |
| 39 PP5V7_MESON_AVDDH_CONN | 25 | 26 | |
| 38 LCM_TO_MAMBA_MSYNC_CONN | 27 | 28 | 90_MIPI_AP_TO_LCM_DATA0_CONN_P 39 |
| TP_LCM_PIFA | 29 | 30 | 90_MIPI_AP_TO_LCM_DATA0_CONN_N 39 |
| 39 90_MIPI_AP_TO_LCM_CLK_CONN_P | 31 | 32 | |
| 39 90_MIPI_AP_TO_LCM_CLK_CONN_N | 33 | 34 | 90_MIPI_AP_TO_LCM_DATA1_CONN_P 39 |
| | 35 | 36 | 90_MIPI_AP_TO_LCM_DATA1_CONN_N 39 |
| 39 4 PP_LCM_BL_CAT1_CONN | 37 | 38 | |
| 39 4 PP_LCM_BL_ANODE_CONN | 39 | 40 | 90_MIPI_AP_TO_LCM_DATA2_CONN_P 46 |
| 39 4 PP_LCM_BL_CAT2_CONN | 41 | 42 | 90_MIPI_AP_TO_LCM_DATA2_CONN_N 46 |
| 46 4 PP_LCM_BL34_CAT1_CONN | 43 | 44 | |
| 46 4 PP_LCM_BL34_ANODE_CONN | 45 | 46 | 90_MIPI_AP_TO_LCM_DATA3_CONN_P 46 |
| 46 4 PP_LCM_BL34_CAT2_CONN | 47 | 48 | 90_MIPI_AP_TO_LCM_DATA3_CONN_N 46 |

# FOREHEAD FLEX CONNECTOR

MLB: 516S00146 (MCO REV 27)

ROOM=FOREHEAD
CRITICAL
J4503
245858036201829
F-ST-SM

| Pin | Net | Pin | Net |
|---|---|---|---|
| 29 PP2V9_NH_AVDD_CONN | 1 | 2 | 90_MIPI_NH_TO_AP_DATA0_P 9 |
| 29 PP1V8_NH_TO_CONN | 3 | 4 | 90_MIPI_NH_TO_AP_DATA0_N 9 |
| | 5 | 6 | |
| 29 AP_TO_NH_SHUTDOWN_CONN_L | 7 | 8 | 90_MIPI_NH_TO_AP_CLK_P 9 |
| | 9 | 10 | 90_MIPI_NH_TO_AP_CLK_N 9 |
| 29 AP_TO_NH_CLK_CONN | 11 | 12 | |
| | 13 | 14 | 90_MIPI_NH_TO_AP_DATA1_P 9 |
| 48 I2C_NH_SCL_CONN | 15 | 16 | 90_MIPI_NH_TO_AP_DATA1_N 9 |
| 47 I2C_ALS_CONVOY_SCL_CONN | 17 | 18 | |
| 29 PDM_CONVOY_TO_ADARE_DATA_CONN | 19 | 20 | PP1V2_NH_DVDD_CONN 29 |
| 29 PP3V0_PROX_CONN | 21 | 22 | I2C_NH_SDA_CONN 48 |
| 29 SPEAKER_TO_SPEAKERAMP2_VSENSE_CONN_N | 23 | 24 | ALS_TO_AP_INT_CONN_L 29 |
| 46 33 29 SPEAKERAMP2_TO_SPEAKER_OUT_NEG | 25 | 26 | I2C_ALS_CONVOY_SDA_CONN 47 |
| 48 I2C_PROX_SDA_CONN | 27 | 28 | PDM_ADARE_TO_CONVOY_CLK_CONN 29 |
| 48 I2C_PROX_SCL_CONN | 29 | 30 | PP3V0_ALS_CONVOY_CONN 29 |
| 29 PROX_BI_AP_AOP_INT_PWM_L_CONN | 31 | 32 | SPEAKER_TO_SPEAKERAMP2_VSENSE_CONN_P 29 |
| 29 PP_CODEC_TO_FRONTMIC3_BIAS_CONN | 33 | 34 | SPEAKERAMP2_TO_SPEAKER_OUT_POS 29 33 46 |
| 29 FRONTMIC3_TO_CODEC_AIN4_CONN_P | 35 | 36 | FRONTMIC3_TO_CODEC_AIN4_CONN_N 29 |

# COMBO BUTTON FLEX CONNECTOR

APPLE APN: 516S00150 <-- THIS ONE ON MLB (matched MCO rev 27)
APPLE APN: 516S00149

ROOM=RIGHT_BUTTON
J4504
AA37D-S014SVA1
F-ST-SM

XW4501
SHORT-20L-0.05MM-SM

| Pin | Net | Pin | Net |
|---|---|---|---|
| MAKE_BASE=TRUE GND | 20 | 19 | |
| 44 26 PP_STROBE_DRIVER2_COOL_LED | 16 | 15 | |
| 44 STROBE_MODULE_NTC_CONN | 2 | 1 | PP_CODEC_TO_REARMIC2_BIAS_CONN 44 |
| 44 PP1V8_HAWKING_CONN | 4 | 3 | REARMIC2_TO_CODEC_AIN3_CONN_N 44 |
| 44 HAWKING_TO_CODEC_AIN7_P_CONN | 6 | 5 | REARMIC2_TO_CODEC_AIN3_CONN_P 44 |
| 44 HAWKING_TO_CODEC_AIN7_N_CONN | 8 | 7 | REARMIC2_TO_CODEC_BIAS_FILT_RET 32 |
| 44 BUTTON_RINGER_A_CONN | 10 | 9 | I2C_MIC2_SDA_CONN 47 |
| 44 BUTTON_VOL_UP_CONN_L | 12 | 11 | I2C_MIC2_SCL_CONN 47 |
| 44 BUTTON_VOL_DOWN_CONN_L | 14 | 13 | BUTTON_POWER_KEY_CONN_L 44 |
| 44 26 PP_STROBE_DRIVER2_WARM_LED | 18 | 17 | PP_STROBE_DRIVER1_COOL_LED 26 44 |
| 44 26 PP_STROBE_DRIVER1_WARM_LED | 22 | 21 | |

CRITICAL

SYNC_MASTER=sync SYNC_DATE=05/17/2016

PAGE TITLE
B2B FF SPECIFIC

Apple Inc.

DRAWING NUMBER 051-00482
SIZE D
REVISION 8.0.0
BRANCH
PAGE 45 OF 53
SHEET 45 OF 81

NOTICE OF PROPRIETARY PROPERTY:
THE INFORMATION CONTAINED HEREIN IS THE PROPRIETARY PROPERTY OF APPLE INC.
THE POSESSOR AGREES TO THE FOLLOWING:
I TO MAINTAIN THIS DOCUMENT IN CONFIDENCE
II NOT TO REPRODUCE OR COPY IT
III NOT TO REVEAL OR PUBLISH IT IN WHOLE OR PART
IV ALL RIGHTS RESERVED

THIS PAGE UNIQUE TO LARGE FORM FACTOR

## 2ND BACKLIGHT DRIVER - 4LED

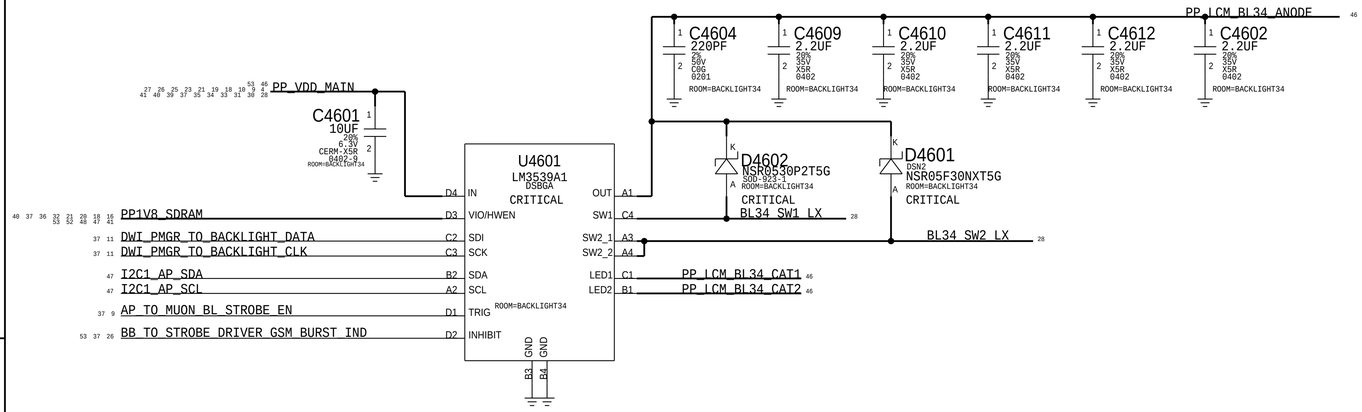


## ISP I2C1

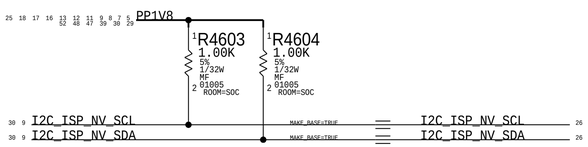


## TOUCH I2C

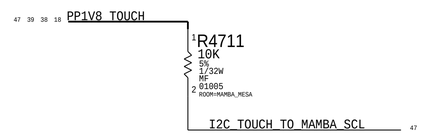


## VDD MAIN CAP
## AC Coupling Caps

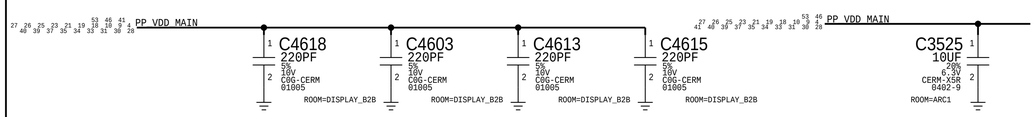


AC return path for LCM MIPI which is referenced to GND and VDD_MAIN

## ARC CAP

## CHESTNUT CAP

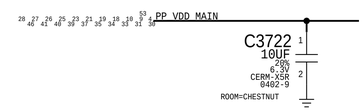


## ACC Buck Caps

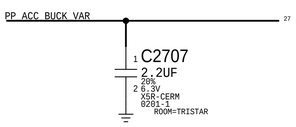


## Top Speaker Compass Coil

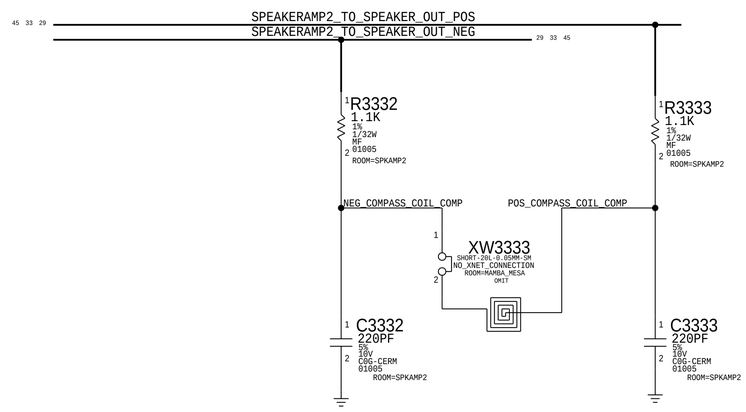


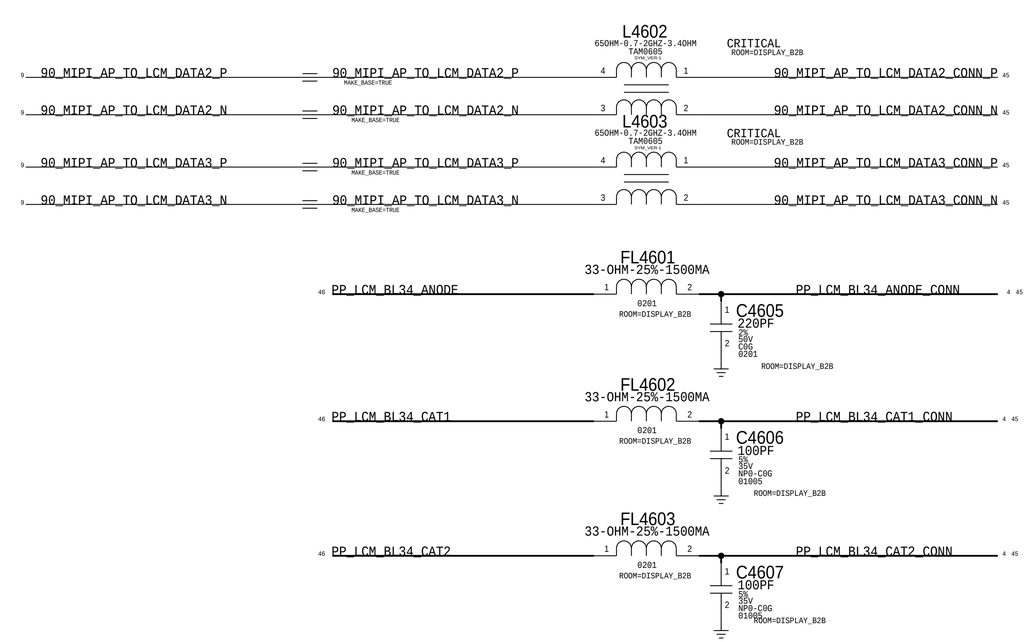


## Dock B2B (Pg 41)

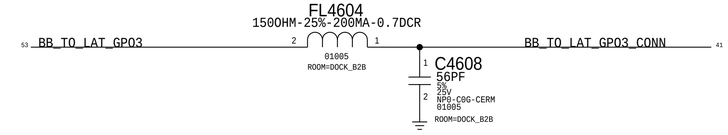


## UT B2B

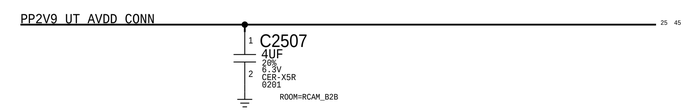


## Extra RF GND

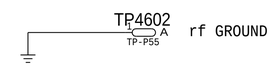


PAGE TITLE
# LARGE FORM FACTOR SPECIFIC

Apple Inc.

DRAWING NUMBER 051-00482 SIZE D
REVISION 8.0.0
BRANCH
PAGE 46 OF 53
SHEET 46 OF 81

NOTICE OF PROPRIETARY PROPERTY:
THE INFORMATION CONTAINED HEREIN IS THE PROPRIETARY PROPERTY OF APPLE INC.
THE POSESSOR AGREES TO THE FOLLOWING:
I TO MAINTAIN THIS DOCUMENT IN CONFIDENCE
II NOT TO REPRODUCE OR COPY IT
III NOT TO REVEAL OR PUBLISH IT IN WHOLE OR PART
IV ALL RIGHTS RESERVED

# AP

## I2C0

PP1V8

R4701 4.02K 1% 1/32W MF 01005 ROOM=SOC
R4702 4.02K 1% 1/32W MF 01005 ROOM=SOC

I2C0_AP_SCL
I2C0_AP_SDA

#24544434

NOSTUFF C4701 56PF 5% 25V NP0-C0G-CERM 01005 ROOM=SOC
NOSTUFF C4702 56PF 5% 25V NP0-C0G-CERM 01005 ROOM=SOC

MAKE_BASE=TRUE

I2C0_AP_SCL
I2C0_AP_SDA

## I2C1

PP1V8

R4703 4.02K 1% 1/32W MF 01005 ROOM=SOC
R4704 4.02K 1% 1/32W MF 01005 ROOM=SOC

I2C1_AP_SCL
I2C1_AP_SDA

#24544426

NOSTUFF C4703 56PF 5% 25V NP0-C0G-CERM 01005 ROOM=PMU
NOSTUFF C4704 56PF 5% 25V NP0-C0G-CERM 01005 ROOM=PMU

MAKE_BASE=TRUE

I2C1_AP_SCL
I2C1_AP_SDA

D11/111 ONLY

## I2C2

PP1V8

R4705 2.2K 5% 1/32W MF 01005 ROOM=SOC
R4706 2.2K 5% 1/32W MF 01005 ROOM=SOC

I2C2_AP_SCL
I2C2_AP_SDA

MAKE_BASE=TRUE

I2C2_AP_SCL
I2C2_AP_SDA

R4707 0.00 0% 1/32W MF 01005 ROOM=FOREHEAD
R4708 0.00 0% 1/32W MF 01005 ROOM=FOREHEAD

I2C_ALS_CONVOY_SCL_CONN
I2C_ALS_CONVOY_SDA_CONN

C4707 56PF 5% 25V NP0-C0G-CERM 01005 ROOM=FOREHEAD
C4708 56PF 5% 25V NP0-C0G-CERM 01005 ROOM=FOREHEAD

TO FOREHEAD FLEX

# TOUCH

PP1V8_TOUCH

NOSTUFF R4712 10K 5% 1/32W MF 01005 ROOM=MAMBA_MESA

NOTE:MAMBA I2C 2.2K PULL-UPS TO PP1V8_TOUCH INSIDE GALILEO
ADDING R3803, R3804 AS OPTION FOR TWEAKING VALUE

I2C_TOUCH_TO_MAMBA_SCL
I2C_TOUCH_BI_MAMBA_SDA

MAKE_BASE=TRUE

I2C_TOUCH_TO_MAMBA_SCL
I2C_TOUCH_BI_MAMBA_SDA

TO MAMBA / MESA FLEX

NOSTUFF C4709 56PF 5% 25V NP0-C0G-CERM 01005 ROOM=MAMBA_MESA
NOSTUFF C4710 56PF 5% 25V NP0-C0G-CERM 01005 ROOM=MAMBA_MESA

I2C_TOUCH_TO_MAMBA_SCL
I2C_TOUCH_BI_MAMBA_SDA

TO DISPLAY / TOUCH FLEX

C4711 56PF 5% 25V NP0-C0G-CERM 01005 ROOM=DISPLAY_B2B
C4712 56PF 5% 25V NP0-C0G-CERM 01005 ROOM=DISPLAY_B2B

# HOMER

PP1V8_SDRAM

R4713 1.00K 5% 1/32W MF 01005 ROOM=HOMER
R4714 1.00K 5% 1/32W MF 01005 ROOM=HOMER

I2C_HOMER_SCL
I2C_HOMER_SDA

# I2C5

PP1V8

R4715 2.2K 5% 1/32W MF 01005 ROOM=SOC
R4716 2.2K 5% 1/32W MF 01005 ROOM=SOC

I2C5_SCL
I2C5_SDA

# I2C3

PP1V8

R4709 2.2K 5% 1/32W MF 01005 ROOM=SOC
R4710 2.2K 5% 1/32W MF 01005 ROOM=SOC

I2C3_AP_SCL
I2C3_AP_SDA

FL4730 1500HM-25%-200MA-0.7DCR 01005 ROOM=DOCK

ckplus_waive=I2C_PULLUP
I2C_MIC1_SCL_CONN

FL4729 100 5% 1/32W MF 01005 ROOM=DOCK

CKPLUS_WAIVE=I2C_PULLUP
I2C_MIC1_SDA_CONN

TO DOCK FLEX

C4730 56PF 5% 25V NP0-C0G-CERM 01005 ROOM=DOCK_B2B
C4729 56PF 5% 25V NP0-C0G-CERM 01005 ROOM=DOCK_B2B

FL4732 1500HM-25%-200MA-0.7DCR 01005 ROOM=RIGHT_BUTTON

I2C_MIC2_SCL_CONN
CKPLUS_WAIVE=I2C_PULLUP

FL4731 1500HM-25%-200MA-0.7DCR 01005 ROOM=RIGHT_BUTTON

I2C_MIC2_SDA_CONN
CKPLUS_WAIVE=I2C_PULLUP

TO COMBINED BUTTON FLEX

C4732 56PF 5% 25V NP0-C0G-CERM 01005 ROOM=RIGHT_BUTTON
C4731 56PF 5% 25V NP0-C0G-CERM 01005 ROOM=RIGHT_BUTTON

FL4742 1500HM-25%-200MA-0.7DCR 01005 ROOM=DISPLAY_B2B

I2C_DISP_EEPROM_SCL_CONN

FL4741 1500HM-25%-200MA-0.7DCR 01005 ROOM=DISPLAY_B2B

I2C_DISP_EEPROM_SDA_CONN

TO DISPLAY FLEX

C4742 56PF 5% 25V NP0-C0G-CERM 01005 ROOM=DISPLAY_B2B
C4741 56PF 5% 25V NP0-C0G-CERM 01005 ROOM=DISPLAY_B2B

PAGE TITLE: I2C MAP: AP, TOUCH, HOMER, I2C5

Apple Inc.

DRAWING NUMBER: 051-00482
SIZE: D
REVISION: 8.0.0
BRANCH:
PAGE: 47 OF 53
SHEET: 47 OF 81

NOTICE OF PROPRIETARY PROPERTY:
THE INFORMATION CONTAINED HEREIN IS THE PROPRIETARY PROPERTY OF APPLE INC.
THE POSESSOR AGREES TO THE FOLLOWING:
I TO MAINTAIN THIS DOCUMENT IN CONFIDENCE
II NOT TO REPRODUCE OR COPY IT
III NOT TO REVEAL OR PUBLISH IT IN WHOLE OR PART
IV ALL RIGHTS RESERVED

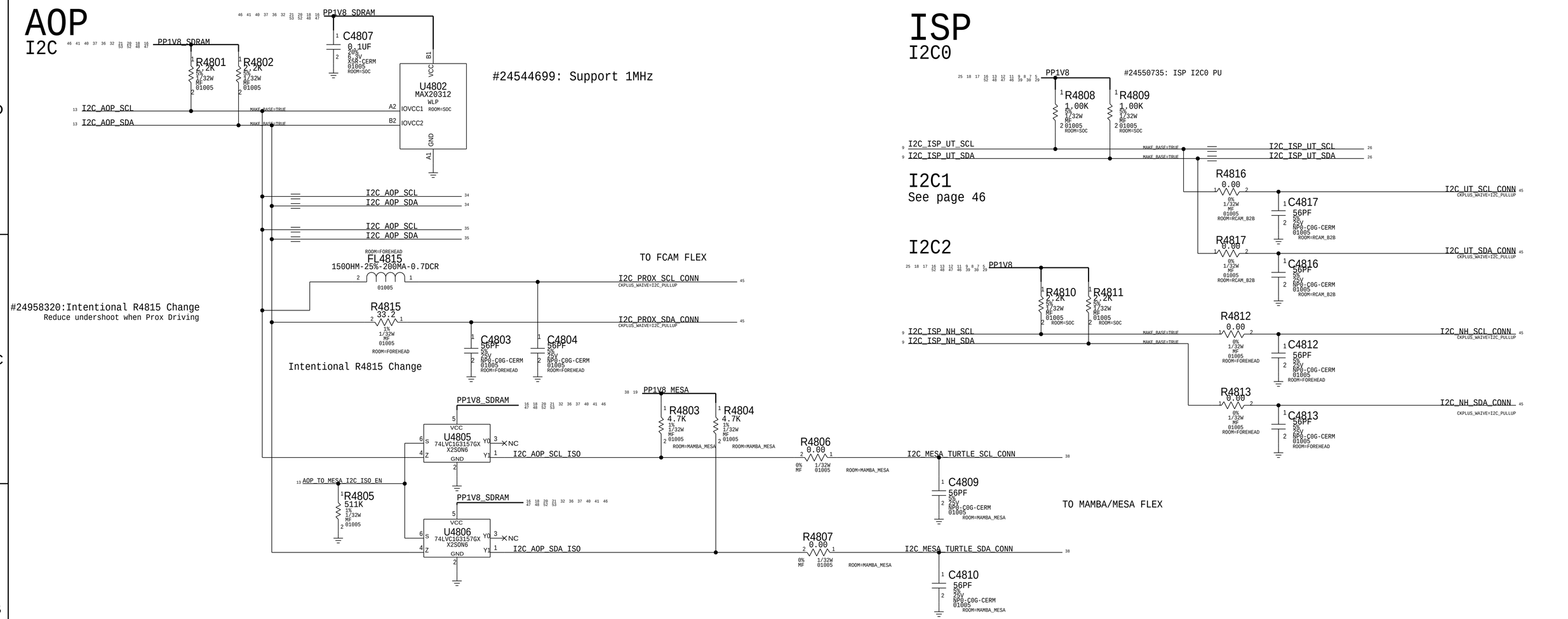


PAGE TITLE

# I2C MAP AOP

Apple Inc.

DRAWING NUMBER 051-00482 SIZE D

REVISION 8.0.0

BRANCH

PAGE 48 OF 53

SHEET 48 OF 81

NOTICE OF PROPRIETARY PROPERTY:
THE INFORMATION CONTAINED HEREIN IS THE PROPRIETARY PROPERTY OF APPLE INC.
THE POSESSOR AGREES TO THE FOLLOWING:
I TO MAINTAIN THIS DOCUMENT IN CONFIDENCE
II NOT TO REPRODUCE OR COPY IT
III NOT TO REVEAL OR PUBLISH IT IN WHOLE OR PART
IV ALL RIGHTS RESERVED

# D1x I2C Table

| Bus | Device | Binary | 7-bit Address | 8-bit Address | Max Speed |
|---|---|---|---|---|---|
| **ISP I2C0** *1MHz* | SALT LAKE (PRIMARY) | 0010000X | 0x10 | 0x20 | 1 MHz |
| | SALT LAKE (SECONDARY) | 0110000X | 0x30 | 0x60 | 1 MHz |
| | GRUNBERG (STANDARD) | 0011100X | 0x1C | 0x38 | 1 MHz |
| | GRUNBERG (SPECIAL ABSOLUTE R/W) | 0011101X | 0x1D | 0x3A | 1 MHz |
| | GRUNBERG (SPECIAL DELTA READ) | 0011110X | 0x1E | 0x3C | 1 MHz |
| | STROBE 1 | 1100011X | 0x63 | 0xC6 | 1 MHz |
| **ISP I2C1** *1MHz* | LAS VEGAS (PRIMARY) | 0100000X | 0x20 | 0x40 | 1 MHz |
| | LAS VEGAS (SECONDARY) | 0110000X | 0x30 | 0x60 | 1 MHz |
| | EDWIN | 1100011X | 0x63 | 0xC6 | 400 kHz |
| | STROBE 2 | 0000110X | 0x06 | 0x0C | 1 MHz |
| **ISP I2C2** *400kHz* | CONCORD | 0010000X | 0x10 | 0x20 | 1 MHz |
| **AOP I2C** *1MHz* | ARC DRIVER 1 | 100000YX | 0x41 | 0x82 | 1 MHz |
| | PROX | 1011000X | 0x58 | 0xB0 | 1 MHz |
| | SPKAMP1 (L26) | 100000YX | 0x40 | 0x80 | 1 MHz |
| | TURTLE | 0101100X | 0x2c | 0x58 | 400 kHz |
| | MESA | 1100001X | 0x61 | 0xC2 | 400 kHz |
| **Touch I2C** *600kHz* | MAMBA | 1100000X | 0x60 | 0xC0 | 1 MHz |
| | MESON | 1000000X | 0x40 | 0x80 | 510 kHz |
| **EEPROM I2C** | EEPROM | 1010001X | 0x51 | 0xA2 | 400 kHz |
| **AP I2C0** *400kHz* | BOOST | 1110101X | 0x75 | 0xEA | 3.4 MHz |
| | TRISTAR | 0011010X | 0x1A | 0x34 | 400 kHz |
| | BACKLIGHT 1 | 1100010X | 0x62 | 0xC4 | 1 MHz |
| | CHESTNUT | 0100111X | 0x27 | 0x4E | 400 kHz |
| **AP I2C1** *400kHz* | ADELYN | 1110100X | 0x74 | 0xE8 | 400 kHz |
| | TIGRIS | 1110101X | 0x75 | 0xEA | 400 kHz |
| | BACKLIGHT 2 | 1100010X | 0x62 | 0xC4 | 1 MHz |
| **AP I2C2** *400kHz* | ALS | 0101001X | 0x29 | 0x52 | 400 kHz |
| | CONVOY | 0100001X | 0x21 | 0x42 | 3.4 MHz |
| | | 0100010X | 0x22 | 0x44 | 400 kHz |
| | SPKAMP 2 (L26) | 10000ZYX | 0x40 | 0x80 | 400 MHz |
| **AP I2C3** *100kHz* | DOCK FLEX (MIC1) | 1010100X | 0x54 | 0xA8 | 1 MHz |
| | COMBINED BUTTON FLEX (MIC2) | 1010100X | 0x56 | 0xAC | 1 MHz |
| | DISP EEPROM | 1010001X | 0x51 | 0xA2 | 400kHz |
| **Homer I2C** *1MHz* | SCHRODINGER (STANDARD) | 0001110X | 0xE | 0x1C | 1 MHz |
| | SCHRODINGER (CAL REG'S) | 0001111X | 0xF | 0x1D | 1 MHz |
| | EEPROM (STANDARD) | 1010000X | 0x50 | 0xA0 | |
| | EEPROM (CONFIG) | 1010000X | 0x50 | 0xA0 | |

PAGE TITLE
I2C TABLE

Apple Inc.

DRAWING NUMBER 051-00482 SIZE D
REVISION 8.0.0
BRANCH
PAGE 49 OF 53
SHEET 49 OF 81

NOTICE OF PROPRIETARY PROPERTY:
THE INFORMATION CONTAINED HEREIN IS THE PROPRIETARY PROPERTY OF APPLE INC.
THE POSESSOR AGREES TO THE FOLLOWING:
I TO MAINTAIN THIS DOCUMENT IN CONFIDENCE
II NOT TO REPRODUCE OR COPY IT
III NOT TO REVEAL OR PUBLISH IT IN WHOLE OR PART
IV ALL RIGHTS RESERVED

spare

spare

This page controls elements different accross all MLBs

# PCIe Lanes

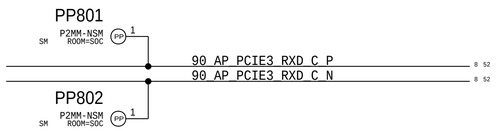


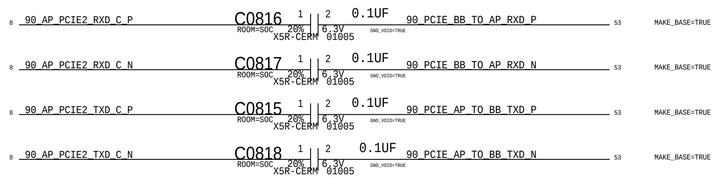


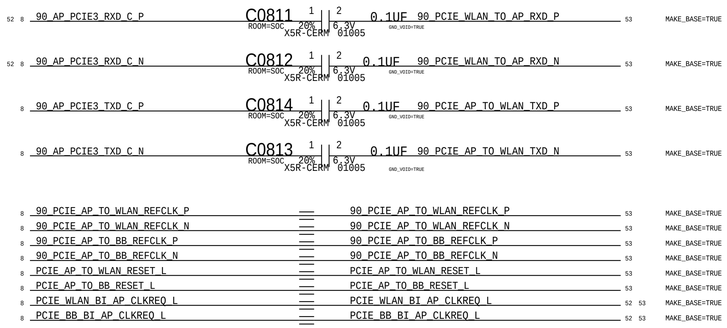


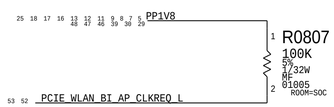


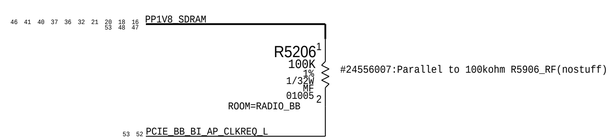


SYNC_MASTER=david-copy SYNC_DATE=03/01/2016

PAGE TITLE

MLB UNIQUE

Apple Inc.

| | |
|---|---|
| DRAWING NUMBER | 051-00482 |
| SIZE | D |
| REVISION | 8.0.0 |
| BRANCH | |
| PAGE | 52 OF 53 |
| SHEET | 52 OF 81 |

NOTICE OF PROPRIETARY PROPERTY:

THE INFORMATION CONTAINED HEREIN IS THE PROPRIETARY PROPERTY OF APPLE INC.
THE POSESSOR AGREES TO THE FOLLOWING:
I TO MAINTAIN THIS DOCUMENT IN CONFIDENCE
II NOT TO REPRODUCE OR COPY IT
III NOT TO REVEAL OR PUBLISH IT IN WHOLE OR PART
IV ALL RIGHTS RESERVED

# Wifi/BT

I32

WIFI_MLB

| | | | |
|---|---|---|---|
| 27 26 25 23 21 19 18 10 9 4 / 40 39 37 35 34 33 31 30 28 | PP_VDD_MAIN | PP_VDD_MAIN | |
| 46 41 40 37 36 32 21 20 18 16 / 60 59 58 55 53 52 48 47 | PP1V8_SDRAM | PP1V8_SDRAM | |
| 60 20 | PMUGPIO_TO_WLAN_CLK32K | PMU_TO_WLAN_32K | |
| 60 20 | PMU_TO_WLAN_REG_ON | PMU_TO_WLAN_REG_ON | |
| 60 20 | PMU_TO_BT_REG_ON | PMU_TO_BT_REG_ON | |
| 60 20 | BT_TO_PMU_HOST_WAKE | BT_TO_PMU_HOST_WAKE | |
| 60 12 | AP_TO_BT_WAKE | AP_TO_BT_WAKE | |
| 60 52 | 90_PCIE_AP_TO_WLAN_REFCLK_P | 100_PCIE_AP_TO_WLAN_REFCLK_P | |
| 60 52 | 90_PCIE_AP_TO_WLAN_REFCLK_N | 100_PCIE_AP_TO_WLAN_REFCLK_N | |
| 60 52 | 90_PCIE_AP_TO_WLAN_TXD_P | 100_PCIE_AP_TO_WLAN_TX_P | |
| 60 52 | 90_PCIE_AP_TO_WLAN_TXD_N | 100_PCIE_AP_TO_WLAN_TX_N | |
| 60 52 | 90_PCIE_WLAN_TO_AP_RXD_P | 100_PCIE_WLAN_TO_AP_RX_P | |
| 60 52 | 90_PCIE_WLAN_TO_AP_RXD_N | 100_PCIE_WLAN_TO_AP_RX_N | |
| 60 52 | PCIE_AP_TO_WLAN_RESET_L | PCIE_AP_TO_WLAN_PERST_L | |
| 60 52 | PCIE_WLAN_BT_AP_CLKREQ_L | PCIE_AP_BI_WLAN_CLKREQ_L | |
| 60 20 | WLAN_TO_PMU_HOST_WAKE | PCIE_WLAN_TO_PMU_WAKE | |
| 60 12 | AP_TO_WLAN_DEVICE_WAKE | AP_TO_WLAN_DEV_WAKE | |
| 60 12 | UART_AP_TO_WLAN_TXD | UART_AP_TO_WLAN_TXD | |
| 60 12 | UART_WLAN_TO_AP_RXD | UART_WLAN_TO_AP_RXD | |
| 60 12 | UART_AP_TO_WLAN_RTS_L | UART_AP_TO_WLAN_RTS_L | |
| 60 12 | UART_WLAN_TO_AP_CTS_L | UART_WLAN_TO_AP_CTS_L | |
| 60 12 | UART_AP_TO_BT_TXD | UART_AP_TO_BT_TXD | |
| 60 12 | UART_BT_TO_AP_RXD | UART_BT_TO_AP_RXD | |
| 60 12 | UART_AP_TO_BT_RTS_L | UART_AP_TO_BT_RTS_L | |
| 60 12 | UART_BT_TO_AP_CTS_L | UART_BT_TO_AP_CTS_L | |
| 60 13 | AOP_TO_WLAN_CONTEXT_A | AOP_TO_WLAN_CONTEXT_A | |
| 60 13 | AOP_TO_WLAN_CONTEXT_B | AOP_TO_WLAN_CONTEXT_B | |
| 60 11 | I2S_AP_TO_BT_BCLK | I2S_AP_TO_BT_BCLK | |
| 60 11 | I2S_AP_TO_BT_LRCLK | I2S_AP_TO_BT_LRCK | |
| 60 11 | I2S_BT_TO_AP_DIN | I2S_BT_TO_AP_DIN | |
| 60 11 | I2S_AP_TO_BT_DOUT | I2S_AP_TO_BT_DOUT | |
| 68 60 53 | UART_BB_TO_WLAN_COEX | UART_BB_TO_WLAN_COEX | |
| 68 60 53 | UART_WLAN_TO_BB_COEX | UART_WLAN_TO_BB_COEX | |
| 61 57 53 | 50_UAT_WLAN_5G_WEST | 50_UAT_WLAN_5G_WEST | |
| 61 57 53 | 50_UAT_WLAN_2G_EAST | 50_UAT_WLAN_2G_EAST | |
| 61 57 53 | 50_UAT_WLAN_5G_EAST | 50_UAT_WLAN_5G_EAST | |
| 60 57 53 | 50_WLAN_G_1 | 50_WLAN_G_1 | |
| 60 57 53 | 50_WLAN_A_1 | 50_WLAN_A_1 | |
| 61 58 53 | 50_UAT2_M | 50_UAT2_M | |

# Cellular

RADIO_MLB

| | | | |
|---|---|---|---|
| 27 26 25 23 21 19 18 10 9 4 / 40 39 37 35 34 33 31 30 28 | PP_VDD_MAIN | PP_VDD_MAIN | |
| 46 41 40 37 36 32 21 20 18 16 / 60 59 58 55 53 52 48 47 | PP1V8_SDRAM | PP1V8_SDRAM | |
| 65 38 37 32 30 25 23 19 | PP_VDD_BOOST | PP_VDD_BOOST_RF | |
| 65 20 | BBPMU_TO_PMU_AMUX1 | BBPMU_TO_PMU_AMUX1 | |
| 65 20 | BBPMU_TO_PMU_AMUX2 | BBPMU_TO_PMU_AMUX2 | |
| 69 20 | BBPMU_TO_PMU_AMUX3 | BBPMU_TO_PMU_AMUX3 | |
| | NC | | |
| Opposite polarity on Karoo --> 64 12 | AP_TO_BBPMU_RADIO_ON_L | AP_TO_BBPMU_RADIO_ON_L | |
| 64 20 | PMU_TO_BBPMU_RESET_L | PMU_TO_BBPMU_RESET_L | |
| 64 12 | AP_TO_BB_RESET_L | AP_TO_BB_RESET_L | |
| | | BB_TO_AP_RESET_ACT_L | |
| 68 12 | BB_TO_AP_RESET_DETECT_L | BB_TO_AP_RESET_DETECT_L | |
| 68 46 37 20 | BB_TO_STROBE_DRIVER_GSM_BURST_IND | BB_TO_AP_GSM_TXBURST | |
| 68 12 | AP_TO_BB_MESA_ON | AP_TO_BB_GYRO_FORCE_PWM | |
| 68 12 | AP_TO_BB_TIME_MARK | AP_TO_BB_TIME_MARK | |
| 68 12 | AP_TO_BB_COREDUMP | AP_TO_BB_COREDUMP_TRIG | |
| 64 39 23 20 13 | LCM_TO_MANY_BSYNC | TOUCH_TO_BBPMU_FORCE_PWM | |
| 68 12 | AP_TO_BB_IPC_GPIO1 | AP_TO_BB_MESA_ON | |
| | | AP_TO_BB_IPC_GPIO2 | |
| 67 52 | 90_PCIE_AP_TO_BB_REFCLK_P | 100_PCIE_AP_TO_BB_REFCLK_P | |
| 67 52 | 90_PCIE_AP_TO_BB_REFCLK_N | 100_PCIE_AP_TO_BB_REFCLK_N | |
| 67 52 | 90_PCIE_AP_TO_BB_TXD_P | 100_PCIE_AP_TO_BB_TX_P | |
| 67 52 | 90_PCIE_AP_TO_BB_TXD_N | 100_PCIE_AP_TO_BB_TX_N | |
| 67 52 | 90_PCIE_BB_TO_AP_RXD_P | 100_PCIE_BB_TO_AP_RX_P | |
| 67 52 | 90_PCIE_BB_TO_AP_RXD_N | 100_PCIE_BB_TO_AP_RX_N | |
| 68 52 | PCIE_AP_TO_BB_RESET_L | PCIE_AP_TO_BB_PERST_L | |
| 68 52 | PCIE_BB_BI_AP_CLKREQ_L | PCIE_AP_BI_BB_CLKREQ_L | |
| 68 20 | BB_TO_PMU_PCIE_HOST_WAKE_L | PCIE_BB_TO_PMU_WAKE_L | |
| | | UART_AP_TO_BB_TXD | |
| | | UART_BB_TO_AP_RXD | |
| 68 13 | UART_AOP_TO_BB_TXD | UART_AOP_TO_BB_TXD | |
| 68 13 | UART_BB_TO_AOP_RXD | UART_BB_TO_AOP_RXD | |
| | | UART_AOP_TO_GNSS_TXD | |
| | | UART_GNSS_TO_AOP_RXD | |
| 68 11 | I2S_BB_TO_AP_BCLK | I2S_AP_TO_BB_BCLK | |
| 68 11 | I2S_BB_TO_AP_LRCLK | I2S_AP_TO_BB_LRCLK | |
| 68 11 | I2S_AP_TO_BB_DOUT | I2S_AP_TO_BB_DOUT | |
| 68 11 | I2S_BB_TO_AP_DIN | I2S_BB_TO_AP_DIN | |
| 68 60 53 | UART_BB_TO_WLAN_COEX | UART_BB_TO_WLAN_COEX | |
| 68 60 53 | UART_WLAN_TO_BB_COEX | UART_WLAN_TO_BB_COEX | |
| 81 55 53 | NFC_SWP | NFC_SWP | |
| 64 55 53 | NFC_TO_BB_CLK_REQ | NFC_TO_BB_CLKREQ | |
| 64 55 53 | BB_TO_NFC_CLK | BB_TO_NFC_CLK | |
| 78 55 53 | NFC_SWP_MUX | NFC_SWP_MUX | |
| 78 55 53 | SE2_READY | SE2_READY | |
| 12 AP_TO_ICEFALL_FW_DWLD_REQ — 78 | AP_TO_ICEFALL_FW_DWLD_REQ MAKE_BASE=TRUE | AP_TO_ICEFALL_FW_DWLD | |
| 78 55 53 | SE2_PWR_REQ | SE2_PWR_REQ | |
| 81 55 53 | SE2_PRESENT | SE2_PRESENT | |
| 78 55 53 | ICEFALL_LDO_ENABLE | ICEFALL_LDO_ENABLE | |
| 67 36 17 13 | SWD_AP_TO_MANY_SWCLK | SWD_AP_TO_BB_CLK | |
| 67 13 | SWD_AOP_BI_BB_SWDIO | SWD_AP_BI_BB_IO | |
| 64 20 | PMU_TO_BB_USB_VBUS_DETECT | USB_BB_VBUS | |
| 67 40 | 90_USB_BB_DATA_P | 90_USB_BB_P | |
| 67 40 | 90_USB_BB_DATA_N | 90_USB_BB_N | |
| 76 57 53 | 50_UAT_WLAN_2G_WEST_PLEXER | 50_UAT_WLAN_2G_WEST_PLEXER | |
| 73 57 53 | 50_UAT_LB_MLB_SOUTH | 50_UAT_LB_MLB_SOUTH | |
| 73 57 53 | 50_UAT_MB_HB_SOUTH | 50_UAT_MB_HB_SOUTH | |
| 75 57 53 | 50_UUAT_LB_MLB_NORTH | 50_UUAT_LB_MLB_NORTH | |
| 75 57 53 | 50_UAT1_WEST | 50_UAT1_WEST | |
| 68 58 53 | BB_TO_UAT_SCLK MAKE_BASE=TRUE | UAT_RFFE_CLK | |
| 68 58 53 | BB_TO_UAT_DATA MAKE_BASE=TRUE | UAT_RFFE_DATA | |
| 76 58 53 | 50_UAT1_TUNER | 50_UAT1_TUNER | |
| 68 58 53 | BUFFER_GPO1 | BUFFER_GPO1 | |
| Per JimYang 3/17, D11 only, NC BUFFER_GPO2 | NC | BUFFER_GPO2 | |
| 68 58 53 41 | BB_TO_LAT_ANT_SCLK | LAT_RFFE_CLK | |
| 68 58 53 41 | BB_TO_LAT_ANT_DATA | LAT_RFFE_DATA | |
| 68 41 | BB_TO_LAT_GPO1 | RFFE_GPO1 | |
| 68 41 | BB_TO_LAT_GPO2 | RFFE_GPO2 | |
| 68 46 | BB_TO_LAT_GPO3 | RFFE_GPO3 | |
| | | PMU_TO_GNSS_EN | |
| | | UART_AP_TO_GNSS_TXD | |
| | | UART_GNSS_TO_AP_RXD | |
| | | UART_AP_TO_GNSS_RTS_L | |
| | | UART_GNSS_TO_AP_CTS_L | |
| | | GNSS_TO_PMU_HOST_WAKE | |
| | | AP_TO_GNSS_TIME_MARK | |

I33

# FF SPECIFIC

T16

RADIO_MLB_FF

| | | | |
|---|---|---|---|
| 60 57 53 | 50_WLAN_A_1 | 50_WLAN_A_1 | |
| 60 57 53 | 50_WLAN_G_1 | 50_WLAN_G_1 | |
| 61 57 53 | 50_UAT_WLAN_5G_EAST | 50_UAT_WLAN_5G_EAST | |
| 61 57 53 | 50_UAT_WLAN_2G_EAST | 50_UAT_WLAN_2G_EAST | |
| 61 57 53 | 50_UAT_WLAN_5G_WEST | 50_UAT_WLAN_5G_WEST | |
| 61 58 53 | 50_UAT2_M | 50_UAT2_M | |
| | | 50_UAT_WLAN_2G_WEST_PLEXER | 53 57 76 |
| | | 50_UUAT_LB_MLB_NORTH | 53 57 75 |
| | | 50_UAT_MB_HB_SOUTH | 53 57 73 |
| | | 50_UAT_LB_MLB_SOUTH | 53 57 73 |
| | | 50_UAT1_WEST | 53 57 75 |
| | | 50_UAT1_TUNER | 53 58 76 |
| | | PP3V0_TRISTAR_ANT_PROX | 19 29 40 41 58 |
| | | PP1V8_SDRAM | 19 18 20 21 32 36 37 40 41 46 / 47 48 52 53 55 58 60 68 |
| | | BB_TO_UAT_SCLK | 53 58 68 |
| | | BB_TO_UAT_DATA | 53 58 68 |
| | | BUFFER_GPO1 | 53 58 68 |
| | | BB_TO_LAT_ANT_SCLK | 41 53 58 68 |
| | | BB_TO_LAT_ANT_DATA | 41 53 58 68 |
| 27 26 25 23 21 19 18 10 9 4 / 47 40 39 37 35 34 33 31 30 28 | PP_VDD_MAIN | PP_VDD_MAIN | |

P2MM-NSM SM PP5304 — ROOM=UAT_DEBUG
P2MM-NSM SM PP5301 — ROOM=UAT_DEBUG
P2MM-NSM SM PP5302 — ROOM=UAT_DEBUG
P2MM-NSM SM PP5303 — ROOM=UAT_DEBUG

# NFC

T10

STOCKHOLM_MLB

| | | | |
|---|---|---|---|
| 27 26 25 23 21 19 18 10 9 4 / 40 39 37 35 34 33 31 30 28 | PP_VDD_MAIN | PP_VDD_MAIN | |
| 46 41 40 37 36 32 21 20 18 16 / 68 60 58 55 53 52 48 47 | PP1V8_SDRAM | PP1V8_SDRAM | |
| 55 20 | PMU_TO_NFC_EN | PMU_TO_NFC_EN | |
| 64 55 53 | BB_TO_NFC_CLK | BB_TO_NFC_CLK | |
| 64 55 53 | NFC_TO_BB_CLK_REQ | NFC_TO_BB_CLK_REQ | |
| 55 12 | AP_TO_NFC_FW_DWLD_REQ | AP_TO_NFC_FW_DWLD | |
| 55 12 | AP_TO_NFC_DEV_WAKE | AP_TO_NFC_DEV_WAKE | |
| 55 20 | NFC_TO_PMU_HOST_WAKE | NFC_TO_PMU_HOST_WAKE | |
| 55 12 | UART_AP_TO_NFC_TXD | UART_AP_TO_NFC_TXD | |
| 55 12 | UART_NFC_TO_AP_RXD | UART_NFC_TO_AP_RXD | |
| 55 12 | UART_AP_TO_NFC_RTS_L | UART_AP_TO_NFC_RTS_L | |
| 55 12 | UART_NFC_TO_AP_CTS_L | UART_NFC_TO_AP_CTS_L | |
| 81 55 53 | NFC_SWP | NFC_SWP | |
| 78 55 53 | SE2_READY | SE2_READY | |
| 78 55 53 | SE2_PWR_REQ | SE2_PWR_REQ | |
| 81 55 53 | SE2_PRESENT | SE2_PRESENT | |
| 78 55 53 | NFC_SWP_MUX | NFC_SWP_MUX | |
| 78 55 53 | ICEFALL_LDO_ENABLE | ICEFALL_LDO_ENABLE | |

SYNC_MASTER=david-copy SYNC_DATE=03/01/2016

PAGE TITLE
CELL,WIFI,NFC

Apple Inc.

DRAWING NUMBER 051-00482 SIZE D
REVISION 8.0.0
BRANCH
PAGE 53 OF 53
SHEET 53 OF 81

NOTICE OF PROPRIETARY PROPERTY:
THE INFORMATION CONTAINED HEREIN IS THE PROPRIETARY PROPERTY OF APPLE INC.
THE POSESSOR AGREES TO THE FOLLOWING:
I TO MAINTAIN THIS DOCUMENT IN CONFIDENCE
II NOT TO REPRODUCE OR COPY IT
III NOT TO REVEAL OR PUBLISH IT IN WHOLE OR PART
IV ALL RIGHTS RESERVED

1. ALL RESISTANCE VALUES ARE IN OHMS, 0.1 WATT +/- 5%.
2. ALL CAPACITANCE VALUES ARE IN MICROFARADS.
3. ALL CRYSTALS & OSCILLATOR VALUES ARE IN HERTZ.

| REV | ECN | DESCRIPTION OF REVISION | CK APPD / DATE |
|---|---|---|---|
| 8 | 0006532879 | ENGINEERING RELEASED | 2016-07-06 |

# STOCKHOLM_MLB
# JUNE 22, 2016

| | | |
|---|---|---|
| 2 | | PP_VDD_MAIN |
| 2 | IN | PP1V8_SDRAM |
| 2 | IN | PMU_TO_NFC_EN |
| 2 | OUT | NFC_TO_PMU_HOST_WAKE |
| 2 | IN | AP_TO_NFC_DEV_WAKE |
| 2 | IN | AP_TO_NFC_FW_DWLD_REQ |
| 2 | OUT | NFC_TO_BB_CLK_REQ |
| 2 | IN | BB_TO_NFC_CLK |
| 2 | IN | UART_AP_TO_NFC_TXD |
| 2 | OUT | UART_NFC_TO_AP_RXD |
| 2 | IN | UART_AP_TO_NFC_RTS_L |
| 2 | OUT | UART_NFC_TO_AP_CTS_L |
| 2 | IO | NFC_SWP |
| 2 | IN | SE2_READY |
| 2 | IN | SE2_PWR_REQ |
| 2 | IN | SE2_PRESENT |
| 2 | OUT | NFC_SWP_MUX |
| 2 | OUT | ICEFALL_LDO_ENABLE |

## ALTERNATES

| PART NUMBER | ALTERNATE FOR PART NUMBER | REFERENCE DESIGNATOR(S) | DESCRIPTION | BOM OPTION |
|---|---|---|---|---|
| 132S0436 | 132S0400 | C7504_RF | 0.22UF 20% 6.3V 01005 | |

| PART# | QTY | DESCRIPTION | REFERENCE DESIGNATOR(S) | CRITICAL | BOM OPTION |
|---|---|---|---|---|---|
| 353S01007 | 1 | ONSEMI,IC LOAD SWITCH, WLCSP4 | NFCSW_RF | CRITICAL | |

## BOM OPTIONS

| PART# | QTY | DESCRIPTION | REFERENCE DESIGNATOR(S) | BOM OPTION |
|---|---|---|---|---|
| 131S0883 | 1 | 220PF, 0201 2% 50V | C7514_RF | D101 |
| 131S00055 | 1 | 22PF, 0201 2% 50V | C7512_RF | D101 |
| 131S00117 | 1 | 120PF, 0201 2% 50V | C7518_RF | D101 |
| 131S00026 | 1 | 820PF, 0201 2% 50V | C7516_RF | D101 |
| 131S0883 | 1 | 220PF, 0201 2% 50V | C7514_RF | D10_JP |
| 131S00055 | 1 | 22PF, 0201 2% 50V | C7512_RF | D10_JP |
| 131S00019 | 1 | 150PF, 0201 2% 50V | C7518_RF | D10_JP |
| 131S0825 | 1 | 560PF, 0201 2% 50V | C7516_RF | D10_JP |
| 131S0883 | 1 | 220PF, 0201 2% 50V | C7514_RF | D10_ROW |
| 131S00055 | 1 | 22PF, 0201 2% 50V | C7512_RF | D10_ROW |
| 131S00117 | 1 | 120PF, 0201 2% 50V | C7518_RF | D10_ROW |
| 131S00026 | 1 | 820PF, 0201 2% 50V | C7516_RF | D10_ROW |

| PART# | QTY | DESCRIPTION | REFERENCE DESIGNATOR(S) | BOM OPTION |
|---|---|---|---|---|
| 131S00081 | 1 | 270PF, 0201 2% 25V | C7514_RF | D111 |
| 131S00118 | 1 | 180PF, 0201 2% 50V | C7518_RF | D111 |
| 131S00033 | 1 | 680PF, 0201 2% 50V | C7516_RF | D111 |
| 131S00081 | 1 | 270PF, 0201 2% 25V | C7514_RF | D11_JP |
| 131S0731 | 1 | 100PF, 0201 2% 50V | C7518_RF | D11_JP |
| 131S00033 | 1 | 680PF, 0201 2% 50V | C7516_RF | D11_JP |
| 131S00081 | 1 | 270PF, 0201 2% 25V | C7514_RF | D11_ROW |
| 131S00118 | 1 | 180PF, 0201 2% 50V | C7518_RF | D11_ROW |
| 131S00033 | 1 | 680PF, 0201 2% 50V | C7516_RF | D11_ROW |

page1

DRAWING TITLE: SCH,MLB,D11

Apple Inc.

DRAWING NUMBER: 051-00482 SIZE: D

REVISION: 8.0.0

BRANCH

PAGE: 1 OF 75

SHEET: 54 OF 81

NOTICE OF PROPRIETARY PROPERTY:
THE INFORMATION CONTAINED HEREIN IS THE PROPRIETARY PROPERTY OF APPLE INC.
THE POSESSOR AGREES TO THE FOLLOWING:
I TO MAINTAIN THIS DOCUMENT IN CONFIDENCE
II NOT TO REPRODUCE OR COPY IT
III NOT TO REVEAL OR PUBLISH IT IN WHOLE OR PART
IV ALL RIGHTS RESERVED

# STOCKHOLM

## 5V BOOSTER

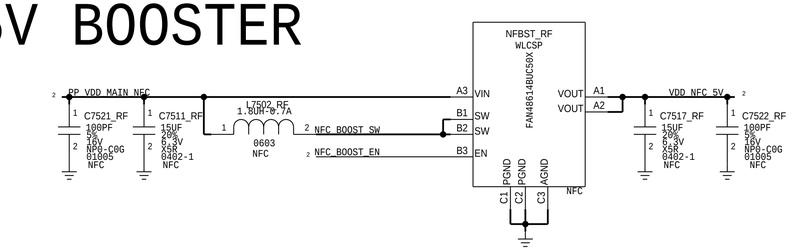


## NFC CONTROLLER

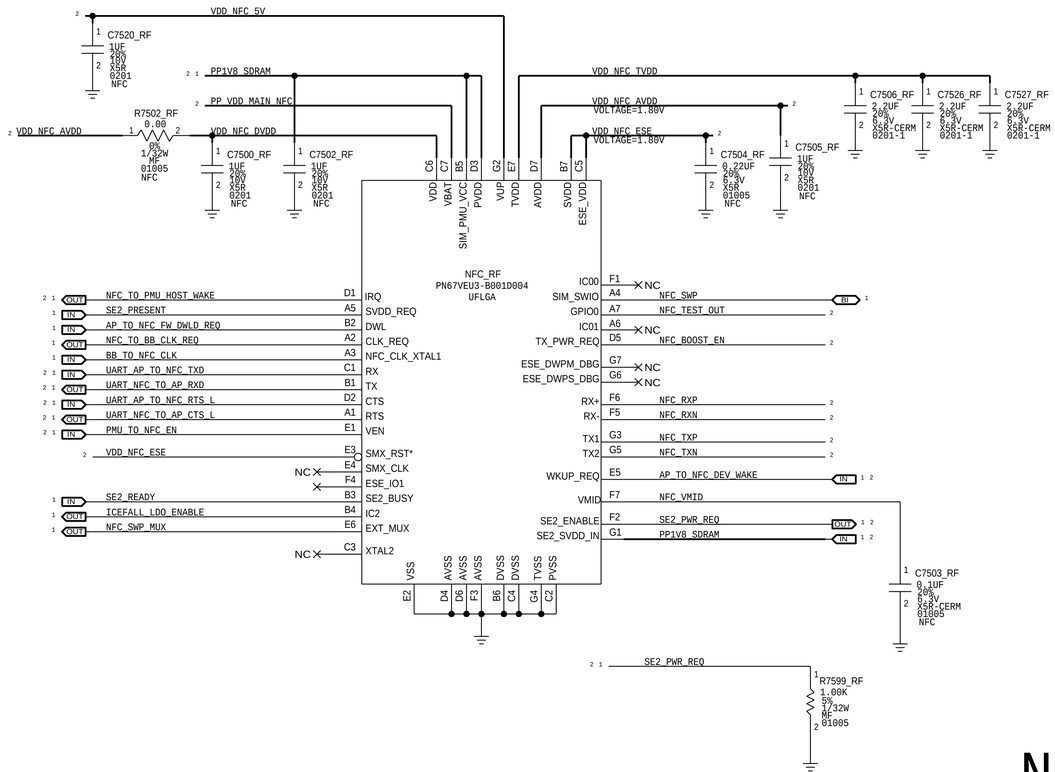


## NFC FRONT END

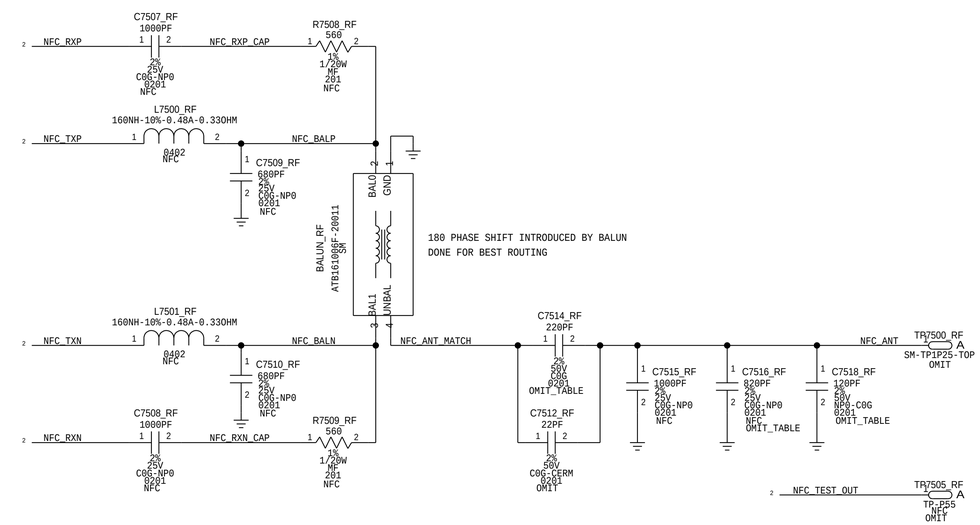


## NFC LOAD SWITCH

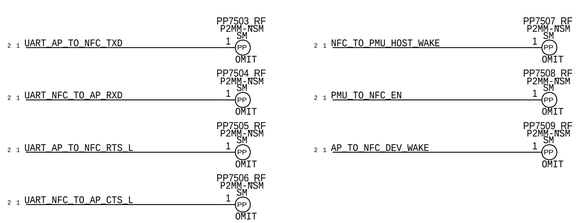


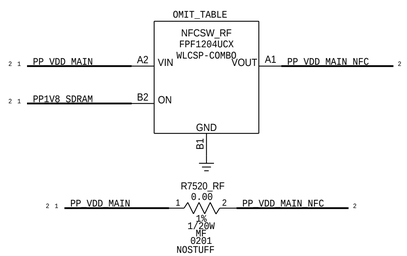


| | |
|---|---|
| PAGE TITLE | NFC |
| Apple Inc. | DRAWING NUMBER 051-00482 SIZE D |
| | REVISION 8.0.0 |
| NOTICE OF PROPRIETARY PROPERTY: | BRANCH |
| THE INFORMATION CONTAINED HEREIN IS THE PROPRIETARY PROPERTY OF APPLE INC. THE POSESSOR AGREES TO THE FOLLOWING: I TO MAINTAIN THIS DOCUMENT IN CONFIDENCE II NOT TO REPRODUCE OR COPY IT III NOT TO REVEAL OR PUBLISH IT IN WHOLE OR PART IV ALL RIGHTS RESERVED | PAGE 75 OF 75 |
| | SHEET 55 OF 81 |

1. ALL RESISTANCE VALUES ARE IN OHMS, 0.1 WATT +/- 5%.
2. ALL CAPACITANCE VALUES ARE IN MICROFARADS.
3. ALL CRYSTALS & OSCILLATOR VALUES ARE IN HERTZ.

| REV | ECN | DESCRIPTION OF REVISION | CK APPD / DATE |
|---|---|---|---|
| 8 | 0006532879 | ENGINEERING RELEASED | 2016-07-06 |

# D11 RADIO_MLB_FF
# FEB 05, 2016

| PDF PAGE | CONTENTS |
|---|---|
| 2 | METROCIRC |

## LMBRF:

| | | | | | |
|---|---|---|---|---|---|
| 152S2001 | 1 | 2.4NH,600MA,0201 | L8008_RF | CRITICAL | LMBRF |
| 152S0983 | 1 | 6.8NH,2%,1.5A,0.055OHM,0402 | L8009_RF | CRITICAL | LMBRF |

## NOLMBRF:

| PART# | QTY | DESCRIPTION | REFERENCE DESIGNATOR(S) | CRITICAL | BOM OPTION |
|---|---|---|---|---|---|
| 152S2024 | 1 | 1.4NH,1.1A,0201 | L8008_RF | CRITICAL | NOLMBRF |
| 152S00610 | 1 | 3.6NH,2%,1.7A,0.045OHM,0402 | L8009_RF | CRITICAL | NOLMBRF |

?

DRAWING TITLE: SCH,MLB,D11

Apple Inc.

DRAWING NUMBER: 051-00482 SIZE: D

REVISION: 8.0.0

BRANCH:

PAGE: 1 OF 3

SHEET: 56 OF 81

NOTICE OF PROPRIETARY PROPERTY:
THE INFORMATION CONTAINED HEREIN IS THE PROPRIETARY PROPERTY OF APPLE INC.
THE POSESSOR AGREES TO THE FOLLOWING:
I TO MAINTAIN THIS DOCUMENT IN CONFIDENCE
II NOT TO REPRODUCE OR COPY IT
III NOT TO REVEAL OR PUBLISH IT IN WHOLE OR PART
IV ALL RIGHTS RESERVED

# METROCIRC

## D11 NORTH-SOUTH METROCIRC 339S00147

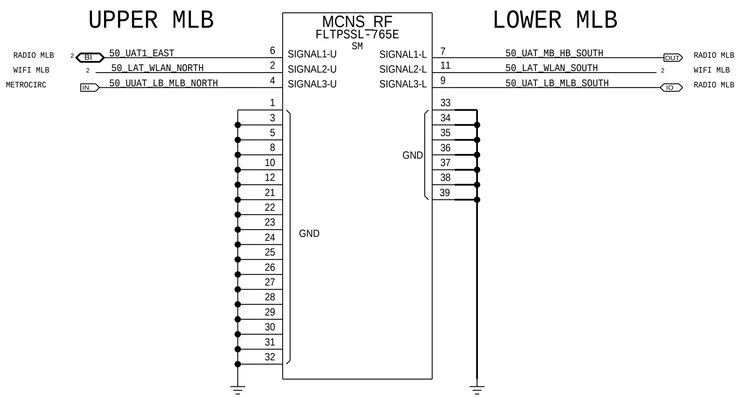


## D11 EAST-WEST METROCIRC 339S00146

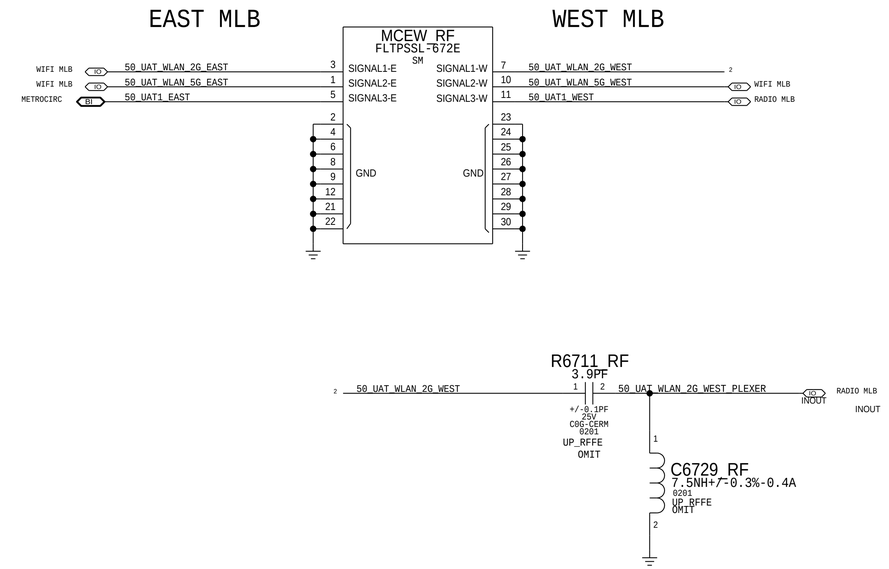


## WIFI LOWER ANTENNA FEED

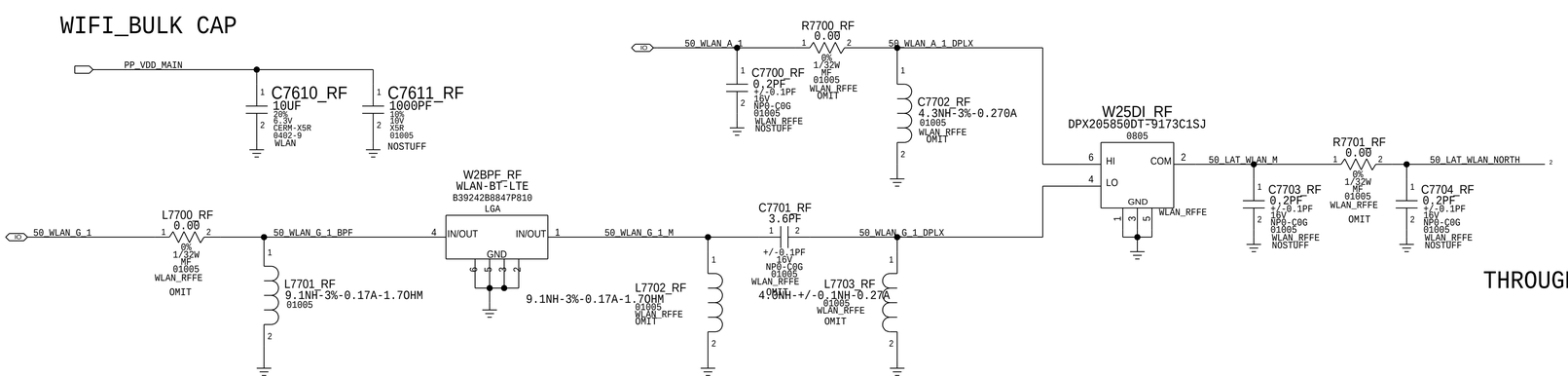


## COAX

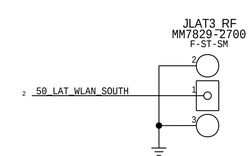


| | |
|---|---|
| PAGE TITLE | METROCIRC [2] |
| Apple Inc. | |
| DRAWING NUMBER | 051-00482 |
| SIZE | D |
| REVISION | 8.0.0 |
| BRANCH | |
| PAGE | 2 OF 3 |
| SHEET | 57 OF 81 |


NOTICE OF PROPRIETARY PROPERTY:

THE INFORMATION CONTAINED HEREIN IS THE PROPRIETARY PROPERTY OF APPLE INC.
THE POSESSOR AGREES TO THE FOLLOWING:
I TO MAINTAIN THIS DOCUMENT IN CONFIDENCE
II NOT TO REPRODUCE OR COPY IT
III NOT TO REVEAL OR PUBLISH IT IN WHOLE OR PART
IV ALL RIGHTS RESERVED

# UAT TUNER FLEX

PLEASE CONTACT ANTENNA (MATT MOW)
FOR ANY COMPONENT CHANGE.

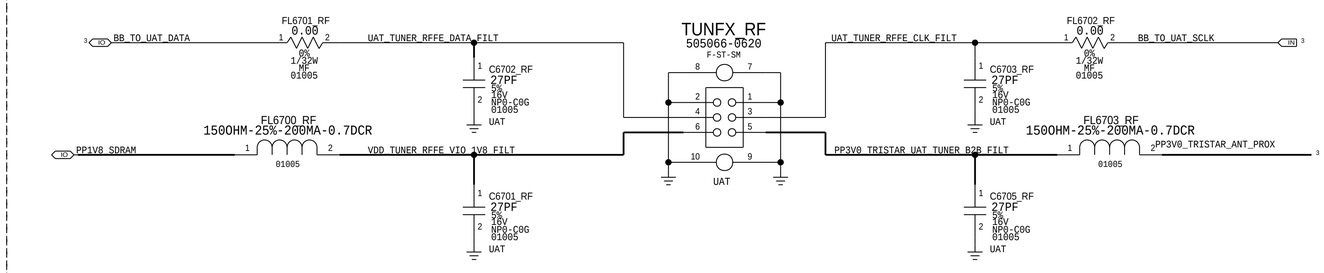


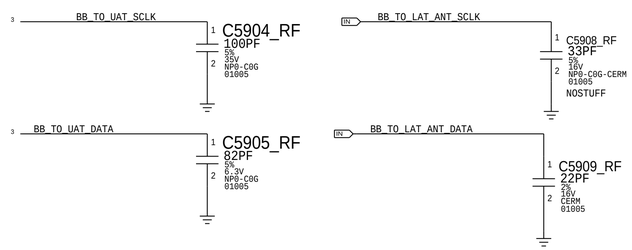


# ALT UAT1 GND

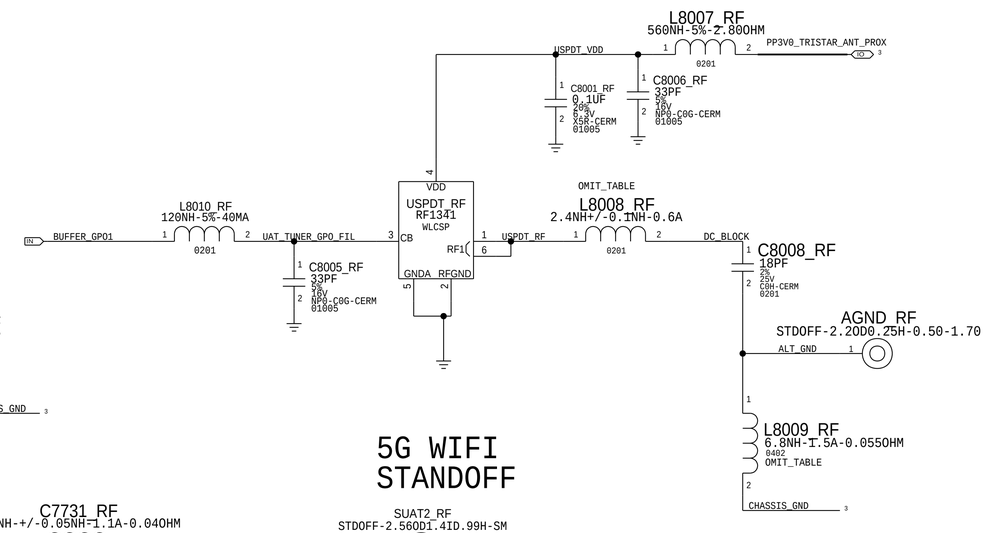


# LB/MLB/GNSS/MB/HB STANDOFF

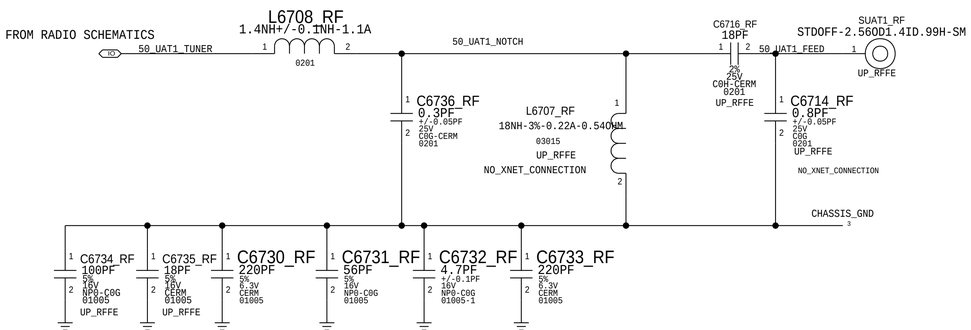


# 5G WIFI STANDOFF

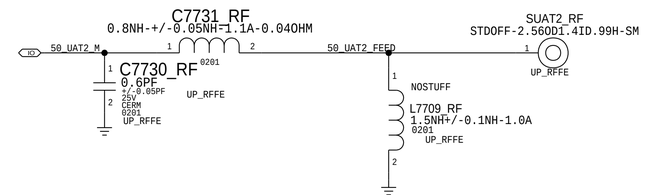


| | |
|---|---|
| PAGE TITLE | UAT MATCH AND TUNER [3] |
| Apple Inc. | DRAWING NUMBER 051-00482 SIZE D |
| | REVISION 8.0.0 |
| NOTICE OF PROPRIETARY PROPERTY: | BRANCH |
| THE INFORMATION CONTAINED HEREIN IS THE PROPRIETARY PROPERTY OF APPLE INC. THE POSESSOR AGREES TO THE FOLLOWING: I TO MAINTAIN THIS DOCUMENT IN CONFIDENCE II NOT TO REPRODUCE OR COPY IT III NOT TO REVEAL OR PUBLISH IT IN WHOLE OR PART IV ALL RIGHTS RESERVED | PAGE 3 OF 3 |
| | SHEET 58 OF 81 |

1. ALL RESISTANCE VALUES ARE IN OHMS, 0.1 WATT +/- 5%.
2. ALL CAPACITANCE VALUES ARE IN MICROFARADS.
3. ALL CRYSTALS & OSCILLATOR VALUES ARE IN HERTZ.

| REV | ECN | DESCRIPTION OF REVISION | CK APPD / DATE |
|---|---|---|---|
| 8 | 0006532879 | ENGINEERING RELEASED | 2016-07-06 |

# D1X WIFI_MLB (PERENNIAL)
# FEBRUARY 1, 2016


| PDF PAGE | CSA PAGE | CONTENTS |
|---|---|---|
| 2 | 76 | PERENNIAL |
| 3 | 77 | WIFI FRONT-END |


## POWER

2 IN PP_VDD_MAIN
2 IN PP1V8_SDRAM

## CLOCKS

2 IN PMUGPIO_TO_WLAN_CLK32K

## CONTROL

2 IN PMU_TO_WLAN_REG_ON
2 IN PMU_TO_BT_REG_ON
2 OUT BT_TO_PMU_HOST_WAKE
2 IN AP_TO_BT_WAKE

## WLAN PCIE

2 IN 90_PCIE_AP_TO_WLAN_REFCLK_P
2 IN 90_PCIE_AP_TO_WLAN_REFCLK_N
2 IN 90_PCIE_AP_TO_WLAN_TXD_P
2 IN 90_PCIE_AP_TO_WLAN_TXD_N
2 OUT 90_PCIE_WLAN_TO_AP_RXD_P
2 OUT 90_PCIE_WLAN_TO_AP_RXD_N
2 IN PCIE_AP_TO_WLAN_RESET_L
2 IO PCIE_WLAN_BI_AP_CLKREQ_L
2 OUT WLAN_TO_PMU_HOST_WAKE
2 IN AP_TO_WLAN_DEVICE_WAKE

## WLAN UART

2 OUT UART_WLAN_TO_AP_RXD
2 IN UART_AP_TO_WLAN_TXD
2 OUT UART_WLAN_TO_AP_CTS_L
2 IN UART_AP_TO_WLAN_RTS_L

## BLUETOOTH UART

2 IN UART_AP_TO_BT_TXD
2 OUT UART_BT_TO_AP_RXD
2 IN UART_AP_TO_BT_RTS_L
2 OUT UART_BT_TO_AP_CTS_L

## AOP

2 IN AOP_TO_WLAN_CONTEXT_A
2 IN AOP_TO_WLAN_CONTEXT_B

## AUDIO

2 IN I2S_AP_TO_BT_BCLK
2 IN I2S_AP_TO_BT_LRCLK
2 OUT I2S_BT_TO_AP_DIN
2 IN I2S_AP_TO_BT_DOUT

## COEX

2 IN UART_BB_TO_WLAN_COEX
2 OUT UART_WLAN_TO_BB_COEX

## ANTENNA

3 IO 50_UAT_WLAN_5G_WEST
3 IO 50_UAT_WLAN_2G_EAST
3 IO 50_UAT_WLAN_5G_EAST
2 IO 50_WLAN_G_1
2 IO 50_WLAN_A_1
3 IO 50_UAT2_M

# BOM OPTIONS:

## D10_JP:

| PART# | QTY | DESCRIPTION | REFERENCE DESIGNATOR(S) | CRITICAL | BOM OPTION |
|---|---|---|---|---|---|
| 131S0648 | 1 | CAP,CER,0.3PF,+/-0.05,01005 | C7705_RF | CRITICAL | D10_JP |
| 152S00029 | 1 | IND,1.1NH,UH-Q,01005 | R7703_RF | CRITICAL | D10_JP |
| 131S0893 | 1 | CAP,CER,0.2PF,+/-0.05,01005 | C7706_RF | CRITICAL | D10_JP |
| 117S0161 | 1 | RES,MF,0 OHM,1/32W,01005 | R7711_RF | CRITICAL | D10_JP |
| 117S0161 | 1 | RES,MF,0 OHM,1/32W,01005 | R7702_RF | CRITICAL | D10_JP |
| 152S1980 | 1 | IND,1.0NH,UH-Q,01005 | R7704_RF | CRITICAL | D10_JP |
| 131S0404 | 1 | CAP,3.9PF,+/-1.0PF,01005 | R6711_RF | CRITICAL | D10_JP |
| 152S2061 | 1 | IND,7.5NH,UH-Q,01005 | C6729_RF | CRITICAL | D10_JP |
| 117S0161 | 1 | RES,MF,0 OHM,1/32W,01005 | R7700_RF | CRITICAL | D10_JP |
| 152S2043 | 1 | IND,6.2NH,UH-Q,01005 | C7702_RF | CRITICAL | D10_JP |
| 152S1998 | 1 TRUE | IND, 0.8NH,UH-Q,01005 | L7700_RF | CRITICAL | D10_JP |
| 152S2043 | 1 | IND,6.2NH,UH-Q,01005 | L7701_RF | CRITICAL | D10_JP |
| 152S1853 | 1 | IND,9.1NH,UH-Q,01005 | L7702_RF | CRITICAL | D10_JP |
| 131S0401 | 1 | CAP,3.6PF,+/-0.1PF,01005 | C7701_RF | CRITICAL | D10_JP |
| 152S00038 | 1 | IND,4.0NH,+/-0.1NH,UH-Q,01005 | L7703_RF | CRITICAL | D10_JP |
| 117S0161 | 1 | RES,MF,0 OHM,1/32W,01005 | R7701_RF | CRITICAL | D10_JP |

NOSTUFF:C7729_RF,C7711_RF,C7709_RF,C7710_RF, C7707_RF, C7708_RF
C7700_RF, C7703_RF,C7704_RF

## D10_ROW:

| PART# | QTY | DESCRIPTION | REFERENCE DESIGNATOR(S) | CRITICAL | BOM OPTION |
|---|---|---|---|---|---|
| 131S0648 | 1 | CAP,CER,0.3PF,+/-0.05,01005 | C7705_RF | CRITICAL | D10_ROW |
| 152S00029 | 1 | IND,1.1NH,UH-Q,01005 | R7703_RF | CRITICAL | D10_ROW |
| 131S0893 | 1 | CAP,CER,0.2PF,+/-0.05,01005 | C7706_RF | CRITICAL | D10_ROW |
| 117S0161 | TRUE | RES,MF,0 OHM,1/32W,01005 | R7711_RF | CRITICAL | D10_ROW |
| 117S0161 | TRUE | RES,MF,0 OHM,1/32W,01005 | R7702_RF | CRITICAL | D10_ROW |
| 152S1988 | TRUE | IND,2.4NH,UH-Q,01005 | R7704_RF | CRITICAL | D10_ROW |
| 117S0161 | TRUE | RES,MF,0 OHM,1/32W,01005 | R6711_RF | CRITICAL | D10_ROW |
| 152S1853 | TRUE | IND,9.1NH,UH-Q,01005 | C6729_RF | CRITICAL | D10_ROW |
| 117S0161 | TRUE | RES,MF,0 OHM,1/32W,01005 | R7700_RF | CRITICAL | D10_ROW |
| 152S2043 | 1 | IND,6.2NH,UH-Q,01005 | C7702_RF | CRITICAL | D10_ROW |
| 152S1998 | 1 TRUE | IND, 0.8NH,UH-Q,01005 | L7700_RF | CRITICAL | D10_ROW |
| 152S2043 | 1 | IND,6.2NH,UH-Q,01005 | L7701_RF | CRITICAL | D10_ROW |
| 152S1853 | 1 | IND,9.1NH,UH-Q,01005 | L7702_RF | CRITICAL | D10_ROW |
| 131S0401 | 1 | CAP,3.6PF,+/-0.1PF,01005 | C7701_RF | CRITICAL | D10_ROW |
| 152S00038 | TRUE | IND,4.0NH,+/-0.1NH,UH-Q,01005 | L7703_RF | CRITICAL | D10_ROW |
| 117S0161 | 1 | RES,MF,0 OHM,1/32W,01005 | R7701_RF | CRITICAL | D10_ROW |

NOSTUFF:C7729_RF,C7711_RF,C7709_RF,C7710_RF, C7707_RF, C7708_RF
C7700_RF, C7703_RF,C7704_RF

## D101_WIFI:

| PART# | QTY | DESCRIPTION | REFERENCE DESIGNATOR(S) | CRITICAL | BOM OPTION |
|---|---|---|---|---|---|
| 131S0648 | 1 | CAP,CER,0.3PF,+/-0.05,01005 | C7705_RF | CRITICAL | D101 |
| 152S00029 | 1 | IND,1.1NH,UH-Q,01005 | R7703_RF | CRITICAL | D101 |
| 131S0893 | 1 | CAP,CER,0.2PF,+/-0.05,01005 | C7706_RF | CRITICAL | D101 |
| 117S0161 | 1 | RES,MF,0 OHM,1/32W,01005 | R7711_RF | CRITICAL | D101 |
| 117S0161 | 1 | RES,MF,0 OHM,1/32W,01005 | R7702_RF | CRITICAL | D101 |
| 152S1988 | TRUE 1 | IND,2.4NH,UH-Q,01005 | R7704_RF | CRITICAL | D101 |
| 131S0648 | TRUE 1 | CAP,CER,0.3PF,+/-0.05PF,01005 | C7708_RF | CRITICAL | D101 |
| 118S0724 | TRUE 1 | RES,MF, 0 OHM,1/20W, 0201 | R6711_RF | CRITICAL | D101 |
| 152S2054 | TRUE 1 | IND,9.1NH,UH-Q,0201 | C6729_RF | CRITICAL | D101 |
| 117S0161 | 1 | RES,MF,0 OHM,1/32W,01005 | R7700_RF | CRITICAL | D101 |
| 152S2043 | TRUE 1 | IND,6.2NH,UH-Q,01005 | C7702_RF | CRITICAL | D101 |
| 152S1998 | 1 TRUE | IND, 0.8NH,UH-Q,01005 | L7700_RF | CRITICAL | D101 |
| 152S2043 | 1 | IND,6.2NH,UH-Q,01005 | L7701_RF | CRITICAL | D101 |
| 152S1853 | 1 | IND,9.1NH,UH-Q,01005 | L7702_RF | CRITICAL | D101 |
| 131S0401 | 1 | CAP,3.6PF,+/-0.1PF,01005 | C7701_RF | CRITICAL | D101 |
| 152S00038 | 1 | IND,4.0NH,+/-0.1NH,UH-Q,01005 | L7703_RF | CRITICAL | D101 |
| 117S0161 | 1 | RES,MF,0 OHM,1/32W,01005 | R7701_RF | CRITICAL | D101 |

NOSTUFF: C7729_RF,C7711_RF,C7709_RF,C7710_RF, C7707_RF
C7700_RF, C7703_RF,C7704_RF

## D11_JP:

| PART# | QTY | DESCRIPTION | REFERENCE DESIGNATOR(S) | CRITICAL | BOM OPTION |
|---|---|---|---|---|---|
| 152S00273 | TRUE | IND,0.6NH,UH-Q,01005 | R7703_RF | CRITICAL | D11_JP |
| 152S1976 | TRUE | IND,0.7NH,UH-Q,01005 | R7711_RF | CRITICAL | D11_JP |
| 131S0400 | TRUE | CAP,CER,3.5PF+/-0.1,01005 | R7702_RF | CRITICAL | D11_JP |
| 152S1986 | TRUE | IND,FILM,2.2NH,UH-Q,01005 | R7704_RF | CRITICAL | D11_JP |
| 131S0648 | 1 | CAP,CER,0.3PF,+/-0.05PF,01005 | C7708_RF | CRITICAL | D11_JP |
| 131S0593 | TRUE | CAP,3.9PF,+/-1.0PF,0201,HI-Q | R6711_RF | CRITICAL | D11_JP |
| 152S2055 | TRUE | IND,7.5NH,UH-Q,0201 | C6729_RF | CRITICAL | D11_JP |
| 131S0893 | TRUE | CAP,CER,0.2PF,+/-0.05PF,01005 | C7705_RF | CRITICAL | D11_JP |
| 131S0893 | TRUE | CAP,CER,0.2PF,+/-0.05PF,01005 | C7729_RF | CRITICAL | D11_JP |
| 131S0648 | TRUE TRUE | CAP,CER,0.3PF,+/-0.05PF,01005 | C7700_RF | CRITICAL | D11_JP |
| 152S1980 | TRUE | IND,1.0NH,+/-0.1NH,UH-Q,01005 | R7700_RF | CRITICAL | D11_JP |
| 131S0648 | TRUE | CAP,CER,0.3PF,+/-0.05PF,01005 | C7702_RF | CRITICAL | D11_JP |
| 131S0405 | 1 TRUE | CAP,CER,4.0PF,+/-0.1PF,01005 | R7701_RF | CRITICAL | D11_JP |
| 152S00273 | 1 TRUE | IND,0.6NH,+/-1NH,UH-Q,01005 | L7700_RF | CRITICAL | D11_JP |
| 152S1853 | 1 | IND,9.1NH,UH-Q,01005 | L7701_RF | CRITICAL | D11_JP |
| 152S1853 | 1 | IND,9.1NH,UH-Q,01005 | L7702_RF | CRITICAL | D11_JP |
| 117S0161 | 1 | RES,MF,0 OHM,1/32W,01005 | C7701_RF | CRITICAL | D11_JP |

NOSTUFF:C7706_RF, C7711_RF,C7709_RF,C7710_RF, C7707_RF
C7703_RF,C7704_RF,L7703_RF

## D11_ROW:

| PART# | QTY | DESCRIPTION | REFERENCE DESIGNATOR(S) | CRITICAL | BOM OPTION |
|---|---|---|---|---|---|
| 152S00273 | 1 | IND,0.6NH,UH-Q,01005 | R7703_RF | CRITICAL | D11_ROW |
| 152S1976 | 1 | IND,0.7NH,UH-Q,01005 | R7711_RF | CRITICAL | D11_ROW |
| 131S0400 | 1 | CAP,CER,3.5PF+/-0.1,01005 | R7702_RF | CRITICAL | D11_ROW |
| 152S1986 | TRUE 1 | IND,FILM,2.2NH,UH-Q,01005 | R7704_RF | CRITICAL | D11_ROW |
| 118S0724 | TRUE 1 | RES,MF,0 OHM,1/20W,0201 | R6711_RF | CRITICAL | D11_ROW |
| 152S2054 | TRUE 1 | IND,9.1NH,UH-Q,0201 | C6729_RF | CRITICAL | D11_ROW |
| 131S0893 | 1 | CAP,CER,0.2PF,+/-0.05PF,01005 | C7705_RF | CRITICAL | D11_ROW |
| 131S0893 | TRUE | CAP,CER,0.2PF,+/-0.05PF,01005 | C7729_RF | CRITICAL | D11_ROW |
| 131S0648 | TRUE TRUE | CAP,CER,0.3PF,+/-0.05PF,01005 | C7700_RF | CRITICAL | D11_ROW |
| 152S1980 | TRUE | IND,1.0NH,+/-0.1NH,UH-Q,01005 | R7700_RF | CRITICAL | D11_ROW |
| 131S0648 | TRUE | CAP,CER,0.3PF,+/-0.05PF,01005 | C7702_RF | CRITICAL | D11_ROW |
| 131S0405 | 1 TRUE | CAP,CER,4.0PF,+/-0.1PF,01005 | R7701_RF | CRITICAL | D11_ROW |
| 152S00273 | 1 TRUE | IND,0.6NH,+/-1NH,UH-Q,01005 | L7700_RF | CRITICAL | D11_ROW |
| 152S1853 | 1 | IND,9.1NH,UH-Q,01005 | L7701_RF | CRITICAL | D11_ROW |
| 152S1853 | 1 | IND,9.1NH,UH-Q,01005 | L7702_RF | CRITICAL | D11_ROW |
| 117S0161 | 1 | RES,MF,0 OHM,1/32W,01005 | C7701_RF | CRITICAL | D11_ROW |

NOSTUFF:C7706_RF, C7711_RF,C7709_RF,C7710_RF, C7707_RF, C7708_RF
C7703_RF,C7704_RF,L7703_RF

## D111_WIFI:

| PART# | QTY | DESCRIPTION | REFERENCE DESIGNATOR(S) | CRITICAL | BOM OPTION |
|---|---|---|---|---|---|
| 152S00273 | 1 | IND,0.6NH,UH-Q,01005 | R7703_RF | CRITICAL | D111 |
| 152S1976 | 1 | IND,0.7NH,UH-Q,01005 | R7711_RF | CRITICAL | D111 |
| 131S0400 | 1 | CAP,CER,3.5PF+/-0.1,01005 | R7702_RF | CRITICAL | D111 |
| 152S1986 | TRUE 1 | IND,FILM,2.2NH,UH-Q,01005 | R7704_RF | CRITICAL | D111 |
| 118S0724 | TRUE 1 | RES,MF, 0 OHM,1/20W, 0201 | R6711_RF | CRITICAL | D111 |
| 152S2054 | TRUE 1 | IND,9.1NH,UH-Q,0201 | C6729_RF | CRITICAL | D111 |
| 131S0893 | 1 | CAP,CER,0.2PF,+/-0.05PF,01005 | C7705_RF | CRITICAL | D111 |
| 131S0893 | TRUE | CAP,CER,0.2PF,+/-0.05PF,01005 | C7729_RF | CRITICAL | D111 |
| 131S0648 | TRUE TRUE | CAP,CER,0.3PF,+/-0.05PF,01005 | C7700_RF | CRITICAL | D111 |
| 152S1980 | TRUE | IND,1.0NH,+/-0.1NH,UH-Q,01005 | R7700_RF | CRITICAL | D111 |
| 131S0648 | TRUE | CAP,CER,0.3PF,+/-0.05PF,01005 | C7702_RF | CRITICAL | D111 |
| 131S0405 | 1 TRUE | CAP,CER,4.0PF,+/-0.1PF,01005 | R7701_RF | CRITICAL | D111 |
| 152S00273 | 1 TRUE | IND,0.6NH,+/-1NH,UH-Q,01005 | L7700_RF | CRITICAL | D111 |
| 152S1853 | 1 | IND,9.1NH,UH-Q,01005 | L7701_RF | CRITICAL | D111 |
| 152S1853 | 1 | IND,9.1NH,UH-Q,01005 | L7702_RF | CRITICAL | D111 |
| 117S0161 | 1 | RES,MF,0 OHM,1/32W,01005 | C7701_RF | CRITICAL | D111 |

NOSTUFF:C7706_RF, C7711_RF,C7709_RF,C7710_RF, C7707_RF, C7708_RF
C7703_RF,C7704_RF,L7703_RF

WIFI_MLB SCHEMATIC

| | |
|---|---|
| DRAWING TITLE | SCH,MLB,D11 |
| Apple Inc. | |
| DRAWING NUMBER | 051-00482 |
| SIZE | D |
| REVISION | 8.0.0 |
| BRANCH | |
| PAGE | 1 OF 77 |
| SHEET | 59 OF 81 |


NOTICE OF PROPRIETARY PROPERTY:
THE INFORMATION CONTAINED HEREIN IS THE PROPRIETARY PROPERTY OF APPLE INC.
THE POSESSOR AGREES TO THE FOLLOWING:
I TO MAINTAIN THIS DOCUMENT IN CONFIDENCE
II NOT TO REPRODUCE OR COPY IT
III NOT TO REVEAL OR PUBLISH IT IN WHOLE OR PART
IV ALL RIGHTS RESERVED

CONFIDENTIAL AND PROPRIETARY APPLE SYSTEM DESIGN. FOR REFERENCE PURPOSE ONLY - NOT A CHANGE REQUEST

# WIFI/BT

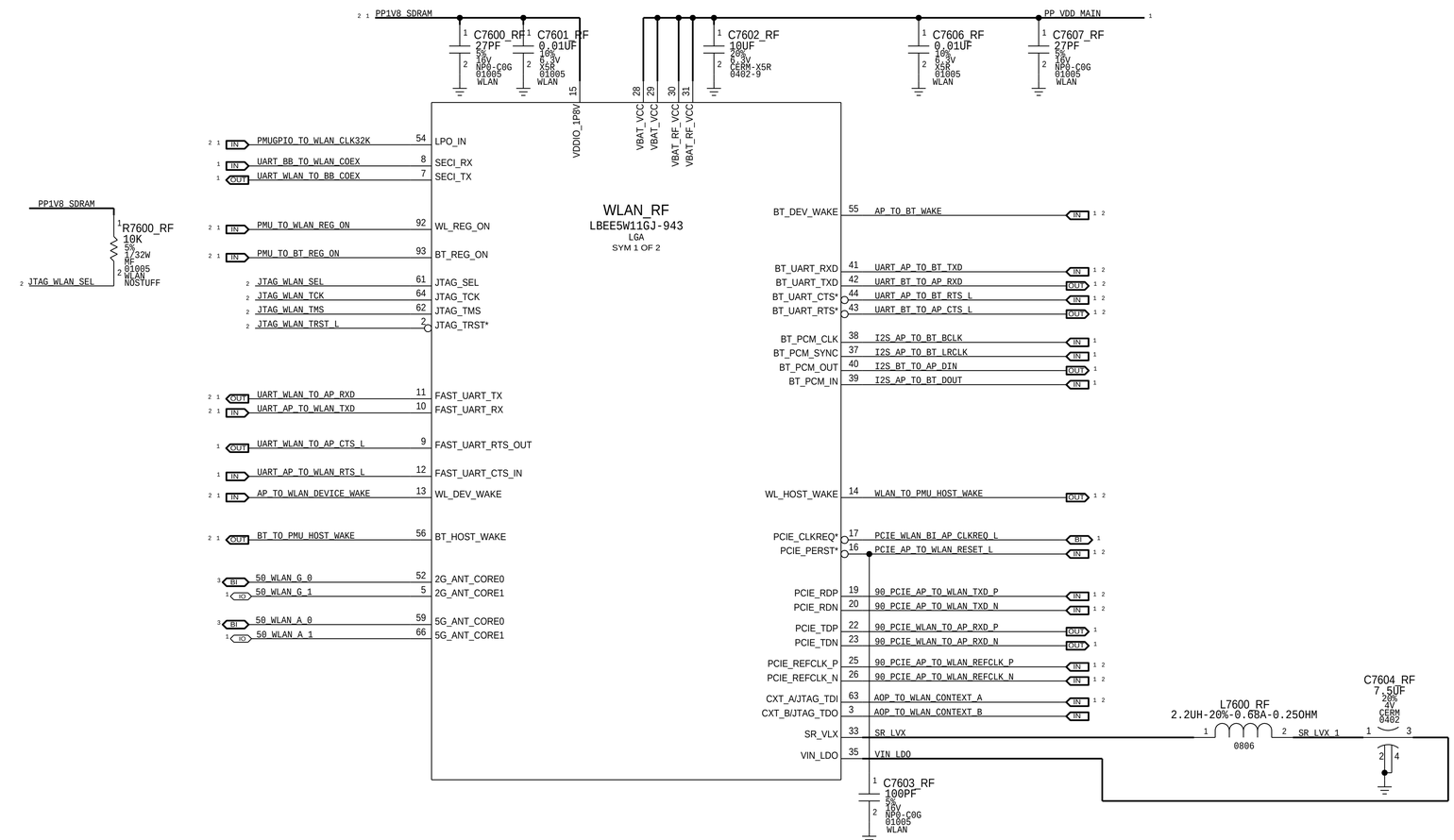


| PART NUMBER | ALTERNATE FOR PART NUMBER | BOM OPTION | REF DES | COMMENTS: |
|---|---|---|---|---|
| 339S00201 | 339S00199 | ALTERNATE | WLAN_RF | ALT WIFI/BT MODULE |

PP7600_RF P2MM-NSM OMIT SM — AOP_TO_WLAN_CONTEXT_A TDI
PP7601_RF P2MM-NSM OMIT SM — AOP_TO_WLAN_CONTEXT_B TDO
PP7603_RF P2MM-NSM OMIT SM — UART_WLAN_TO_AP_RXD
PP7604_RF P2MM-NSM OMIT SM — UART_AP_TO_WLAN_TXD
PP7605_RF P2MM-NSM OMIT SM — JTAG_WLAN_TCK
PP7606_RF P2MM-NSM OMIT SM — JTAG_WLAN_TMS
PP7607_RF P2MM-NSM OMIT SM — JTAG_WLAN_TRST_L
PP7608_RF P2MM-NSM OMIT SM — AP_TO_WLAN_DEVICE_WAKE
PP7609_RF P2MM-NSM OMIT SM — BT_TO_PMU_HOST_WAKE
PP7610_RF P2MM-NSM OMIT SM — PMUGPIO_TO_WLAN_CLK32K
PP7611_RF P2MM-NSM OMIT SM — WLAN_TO_PMU_HOST_WAKE
PP7612_RF P2MM-NSM OMIT SM — 90_PCIE_AP_TO_WLAN_REFCLK_P
PP7613_RF P2MM-NSM OMIT SM — 90_PCIE_AP_TO_WLAN_REFCLK_N
PP7614_RF P2MM-NSM OMIT SM — 90_PCIE_AP_TO_WLAN_TXD_P
PP7615_RF P2MM-NSM OMIT SM — 90_PCIE_AP_TO_WLAN_TXD_N
PP7616_RF P2MM-NSM OMIT SM — PCIE_AP_TO_WLAN_RESET_L
PP7617_RF P2MM-NSM OMIT SM — JTAG_WLAN_SEL
PP7618_RF P2MM-NSM OMIT SM — PMU_TO_WLAN_REG_ON
PP7619_RF P2MM-NSM OMIT SM — PMU_TO_BT_REG_ON
PP7620_RF P2MM-NSM OMIT SM — UART_AP_TO_BT_TXD
PP7621_RF P2MM-NSM OMIT SM — UART_BT_TO_AP_RXD
PP7622_RF P2MM-NSM OMIT SM — UART_AP_TO_BT_RTS_L
PP7623_RF P2MM-NSM OMIT SM — UART_BT_TO_AP_CTS_L
PP7624_RF P2MM-NSM OMIT SM — AP_TO_BT_WAKE

VIETMOBILE.VN

SYNC_MASTER=WIFI SYNC_DATE=01/30/2014

PAGE TITLE: PERENNIAL

Apple Inc.

DRAWING NUMBER: 051-00482 SIZE: D
REVISION: 8.0.0
BRANCH:
PAGE: 76 OF 77
SHEET: 60 OF 81

NOTICE OF PROPRIETARY PROPERTY:
THE INFORMATION CONTAINED HEREIN IS THE PROPRIETARY PROPERTY OF APPLE INC.
THE POSESSOR AGREES TO THE FOLLOWING:
I TO MAINTAIN THIS DOCUMENT IN CONFIDENCE
II NOT TO REPRODUCE OR COPY IT
III NOT TO REVEAL OR PUBLISH IT IN WHOLE OR PART
IV ALL RIGHTS RESERVED

# WIFI UPPER ANTENNA FEEDS

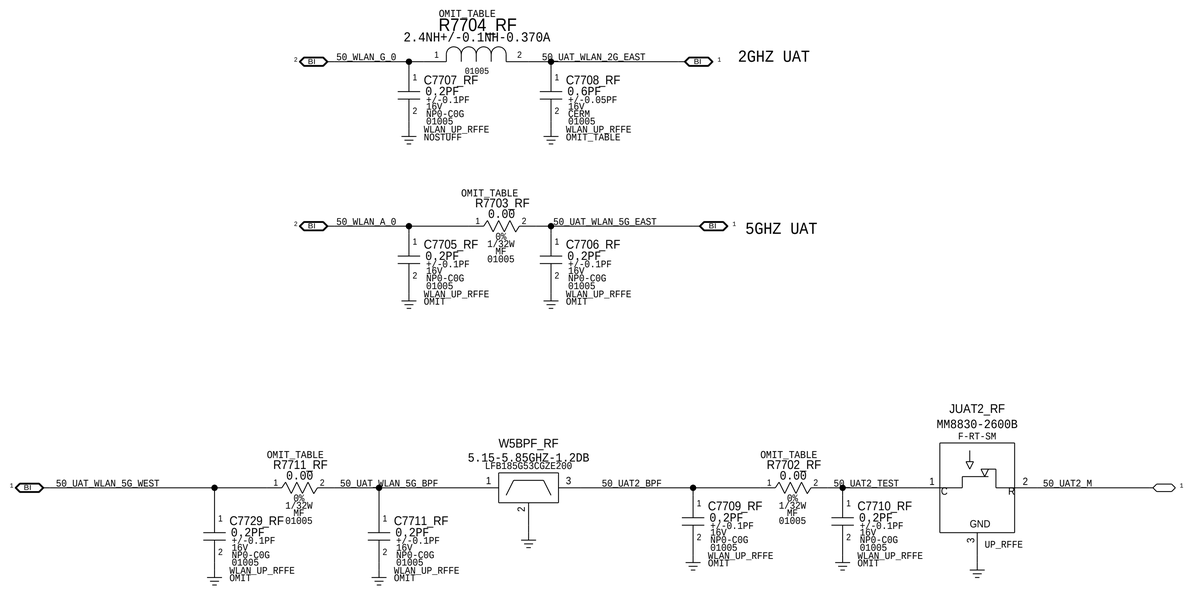


| | |
|---|---|
| PAGE TITLE | WIFI FRONT-END [77] |
| | Apple Inc. |
| DRAWING NUMBER | 051-00482 |
| SIZE | D |
| REVISION | 8.0.0 |
| BRANCH | |
| PAGE | 77 OF 77 |
| SHEET | 61 OF 81 |


NOTICE OF PROPRIETARY PROPERTY:

THE INFORMATION CONTAINED HEREIN IS THE PROPRIETARY PROPERTY OF APPLE INC.
THE POSESSOR AGREES TO THE FOLLOWING:
I TO MAINTAIN THIS DOCUMENT IN CONFIDENCE
II NOT TO REPRODUCE OR COPY IT
III NOT TO REVEAL OR PUBLISH IT IN WHOLE OR PART
IV ALL RIGHTS RESERVED

81 ICEFALL, SIM, DEBUG_CONN

1. ALL RESISTANCE VALUES ARE IN OHMS, 0.1 WATT +/- 5%.
2. ALL CAPACITANCE VALUES ARE IN MICROFARADS.
3. ALL CRYSTALS & OSCILLATOR VALUES ARE IN HERTZ.

| REV | ECN | DESCRIPTION OF REVISION | CK APPD / DATE |
|---|---|---|---|
| 8 | 0006532879 | ENGINEERING RELEASED | 2016-07-06 |

# MAV16 RADIO_MLB

LAST_MODIFICATION=Wed Jun 29 12:06:01 2016


| PAGE | CSA | CONTENTS | SYNC | DATE |
|---|---|---|---|---|
| 62 | 1 | page1 | <SYNC_MASTER1> | <SYNC_DATE1> |
| 63 | 2 | BOM_OMIT_TABLE | <SYNC_MASTER2> | <SYNC_DATE2> |
| 64 | 3 | PMU: CONTROL AND CLOCKS | <SYNC_MASTER3> | <SYNC_DATE3> |
| 65 | 4 | PMU: SWITCHERS AND LDOS | <SYNC_MASTER4> | <SYNC_DATE4> |
| 66 | 5 | BASEBAND: POWER2 | <SYNC_MASTER5> | <SYNC_DATE5> |
| 67 | 6 | BASEBAND: CONTROL | | |
| 68 | 7 | BASEBAND GPIOS | | |
| 69 | 8 | TRANSCEIVER0/1: POWER | | |
| 70 | 9 | TRANSCEIVER0/1: TX PORTS | | |
| 71 | 10 | TRANSCEIVER0/1: PRX PORTS | | |
| 72 | 11 | RECEIVE MATCHING | | |
| 73 | 12 | LOWER ANTENNA & COUPLERS | | |
| 74 | 13 | DIVERSITY RECEIVE ASM'S | | |
| 75 | 14 | DIVERSITY RECEIVE LNA'S | | |
| 76 | 15 | UPPER ANTENNA FEEDS | | |
| 77 | 16 | PMU: ET MODULATOR | | |
| 78 | 17 | TEST POINTS & BOOT CONFIG | | |
| 79 | 18 | TDD TRANSMIT | | |
| 80 | 19 | FDD TRANSMIT | | |
| | 20 | | | |
| | 21 | | | |
| | 22 | | | |
| | 23 | | | |
| | 24 | | | |
| | 25 | | | |
| | 26 | | | |
| | 27 | | | <SYNC_DATE27> |
| | 28 | | | |
| | 29 | | | |
| | 30 | | | <SYNC_DATE30> |


# SCH: 951-00964
# BOM: 939-00826

## ALTERNATES

| PART NUMBER | ALTERNATE FOR PART NUMBER | BOM OPTION | REF DES | COMMENTS: |
|---|---|---|---|---|
| 197S0565 | 197S0593 | ALTERNATE | Y5501_RF | 19P2 MHZ XTAL |
| 197S0598 | 197S0593 | ALTERNATE | Y5501_RF | 19P2 MHZ XTAL |
| 138S00101 | 138S00095 | ALTERNATE | ALL | TRANSITION CAP |
| 335S00013 | 335S0894 | ALTERNATE | EPROM_RF | IC EEPROM |
| 353S00253 | 353S00321 | ALTERNATE | SWPMX_RF | IC SWITCH SPDT |
| 155S00235 | 155S00234 | ALTERNATE | UPPDI_RF | NOLMBRF |

ALL:C5616_RF-C5618_RF,C5632_RF-C5634_RF

# AP CONNECTIONS

## POWER

20 16 4 3 IN PP_VDD_MAIN

IN PP_VDD_BOOST — PP_VDD_BOOST 4 20
20 7 IN PP1V8_SDRAM — MAKE_BASE=TRUE

## AMUX

4 OUT BBPMU_TO_PMU_AMUX1
4 OUT BBPMU_TO_PMU_AMUX2
4 OUT BBPMU_TO_PMU_AMUX3

## BB CONTROL

20 17 3 IN AP_TO_BBPMU_RADIO_ON_L
17 3 IN PMU_TO_BBPMU_RESET_L
20 3 IN AP_TO_BB_RESET_L
17 7 OUT BB_TO_AP_RESET_DETECT_L
17 7 OUT BB_TO_STROBE_DRIVER_GSM_BURST_IND
7 IN AP_TO_BB_IPC_GPIO1
17 7 IN AP_TO_BB_TIME_MARK
17 7 IN AP_TO_BB_COREDUMP
3 IN LCM_TO_MANY_BSYNC
7 IN AP_TO_BB_MESA_ON

## PCIE

17 6 IN 90_PCIE_AP_TO_BB_REFCLK_P
17 6 IN 90_PCIE_AP_TO_BB_REFCLK_N
6 IN 90_PCIE_AP_TO_BB_TXD_P
6 IN 90_PCIE_AP_TO_BB_TXD_N
6 OUT 90_PCIE_BB_TO_AP_RXD_P
6 90_PCIE_BB_TO_AP_RXD_N
7 3 IN PCIE_AP_TO_BB_RESET_L
7 IO PCIE_BB_BI_AP_CLKREQ_L
17 7 OUT BB_TO_PMU_PCIE_HOST_WAKE_L

## AOP

7 IN UART_AOP_TO_BB_TXD
17 7 OUT UART_BB_TO_AOP_RXD

## AUDIO

7 IN I2S_BB_TO_AP_BCLK
7 IN I2S_BB_TO_AP_LRCLK
7 IN I2S_AP_TO_BB_DOUT
7 OUT I2S_BB_TO_AP_DIN

## WLAN

20 17 7 IN UART_BB_TO_WLAN_COEX
20 17 7 OUT UART_WLAN_TO_BB_COEX

## NFC

20 IN NFC_SWP
20 17 IN NFC_SWP_MUX
20 17 OUT SE2_READY
20 17 IN AP_TO_ICEFALL_FW_DWLD_REQ
20 17 IN SE2_PWR_REQ
17 3 IN NFC_TO_BB_CLK_REQ
17 3 OUT BB_TO_NFC_CLK
20 OUT SE2_PRESENT
20 17 IN ICEFALL_LDO_ENABLE

## DEBUG

20 6 IN SWD_AP_TO_MANY_SWCLK
20 6 IO SWD_AOP_BI_BB_SWDIO
20 17 3 IN PMU_TO_BB_USB_VBUS_DETECT
20 17 6 IO 90_USB_BB_DATA_P
20 17 6 IO 90_USB_BB_DATA_N

## ANTENNA

15 IO 50_UAT_WLAN_2G_WEST_PLEXER
14 IO 50_UAT1_WEST
12 IO 50_UAT_LB_MLB_SOUTH
12 IO 50_UAT_MB_HB_SOUTH
14 IO 50_UUAT_LB_MLB_NORTH

## TUNER

OUT BB_TO_UAT_SCLK — MAKE_BASE=TRUE BB_TO_UAT_SCLK 7 14
IO BB_TO_UAT_DATA — BB_TO_UAT_DATA 7 14 MAKE_BASE=TRUE
15 IO 50_UAT1_TUNER
7 OUT BUFFER_GPO1
7 OUT BUFFER_GPO2

## DOCK

OUT BB_TO_LAT_ANT_SCLK — MAKE_BASE=TRUE BB_TO_LAT_ANT_SCLK 7 17
IO BB_TO_LAT_ANT_DATA — BB_TO_LAT_ANT_DATA 7 17 MAKE_BASE=TRUE

7 OUT BB_TO_LAT_GPO1
7 OUT BB_TO_LAT_GPO2
7 OUT BB_TO_LAT_GPO3

page1

| | |
|---|---|
| DRAWING TITLE | SCH,MLB,D11 |
| Apple Inc. | DRAWING NUMBER 051-00482 SIZE D |
| | REVISION 8.0.0 |
| | BRANCH |
| | PAGE 1 OF 72 |
| | SHEET 62 OF 81 |


NOTICE OF PROPRIETARY PROPERTY:
THE INFORMATION CONTAINED HEREIN IS THE PROPRIETARY PROPERTY OF APPLE INC.
THE POSESSOR AGREES TO THE FOLLOWING:
I TO MAINTAIN THIS DOCUMENT IN CONFIDENCE
II NOT TO REPRODUCE OR COPY IT
III NOT TO REVEAL OR PUBLISH IT IN WHOLE OR PART
IV ALL RIGHTS RESERVED

# BOM OPTIONS:

## LMBRF:

| PART# | QTY | DESCRIPTION | REFERENCE DESIGNATOR(S) | CRITICAL | BOM OPTION |
|---|---|---|---|---|---|
| 353S00723 | 1 | MLB PAD | MLBPA_RF | CRITICAL | LMBRF |
| 117S0002 | 1 | MLB PAD LAT OUTPUT MATCH | R7105_RF | CRITICAL | LMBRF |
| 152S2042 | 1 | MLB PAD UAT OUTPUT MATCH | R7106_RF | CRITICAL | LMBRF |
| 353S00627 | 1 | MLB LNA | MLBLN_RF | CRITICAL | LMBRF |
| 117S0002 | 1 | MLB LNA OUTPUT MATCH | R6710_RF | CRITICAL | LMBRF |
| 155S00139 | 1 | PENTAPLEXER | PPLXR_RF | CRITICAL | LMBRF |
| 118S0643 | 1 | RES,MF,4.99K OHM,01005 | R7506_RF | CRITICAL | LMBRF |
| 155S00193 | 1 | FLTR,DIPLEXER,LB-MB-HB,DPX,SHIELD,0805 | UATDI_RF | CRITICAL | LMBRF |
| 155S00158 | 1 | FLTR,DIPLEXER,LB-MB/HB,MIRROR,0805 | UPPDI_RF | CRITICAL | LMBRF |
| 337S00284 | 1 | IC,SECURE ELEMENT,BCM20211,WLBGA25 | SE2_RF | CRITICAL | LMBRF |
| 138S0739 | 1 | CAP,1UF,0201 | C7201_RF | CRITICAL | LMBRF |
| 138S0739 | 1 | CAP,1UF,0201 | C7528_RF | CRITICAL | LMBRF |
| 132S0316 | 1 | CAP,0.1UF,01005 | C7501_RF | CRITICAL | LMBRF |
| 138S0739 | 1 | CAP,1UF,0201 | C7523_RF | CRITICAL | LMBRF |
| 138S0739 | 1 | CAP,1UF,0201 | C7524_RF | CRITICAL | LMBRF |
| 138S00032 | 1 | CAP,2.2UF,0201 | C7529_RF | CRITICAL | LMBRF |
| 138S00032 | 1 | CAP,2.2UF,0201 | C7530_RF | CRITICAL | LMBRF |
| 131S0217 | 1 | CAP,100PF,01005 | C7531_RF | CRITICAL | LMBRF |
| 118S0627 | 1 | RES,10KOHM,01005 | R7512_RF | CRITICAL | LMBRF |
| 353S00026 | 1 | LDO,BGA,2X2 | SE2LDO_RF | CRITICAL | LMBRF |
| 131S0630 | 1 | CAP,CER,NPO/COG,27PF,2%,16V,01005 | C6345_RF | CRITICAL | LMBRF |
| 131S0341 | 1 | CAP,CER,COG,3.0PF,+/-0.05,25V,0201,HI-Q | C6348_RF | CRITICAL | LMBRF |
| 152S2006 | 1 | IND,FILM,6.2NH,3%,400MA,UH-Q,0201 | L6322_RF | CRITICAL | LMBRF |
| 131S0630 | 1 | CAP,CER,NPO/COG,27PF,2%,16V,01005 | C6315_RF | CRITICAL | LMBRF |
| 152S2006 | 1 | IND,FILM,6.2NH,3%,400MA,UH-Q,0201 | L6305_RF | CRITICAL | LMBRF |
| 131S0341 | 1 | CAP,CER,COG,3.0PF,+/-0.05PF,25V,0201,HI-Q | C6306_RF | CRITICAL | LMBRF |
| 131S0630 | 1 | CAP,CER,NPO/COG,27PF,2%,16V,01005 | C6106_RF | CRITICAL | LMBRF |
| 152S2051 | 1 | IND,1.3NH,1.1A,0201 | R6404_RF | CRITICAL | LMBRF |
| 152S2000 | 1 | IND,2.0NH,600MA,0201 | R7104_RF | CRITICAL | LMBRF |
| 131S00001 | 1 | CAP,CER,0.1PF,25V,0201 | C7119_RF | CRITICAL | LMBRF |
| 118S0724 | 1 | RES,MF,0OHM,1/20W,0201 | R6703_RF | CRITICAL | LMBRF |
| 118S0724 | 1 | RES,MF,0OHM,1/20W,0201 | R6708_RF | CRITICAL | LMBRF |
| 131S0363 | 1 | CAP,CER,C0G,HQ,0.6PF,+/-0.05PF,25V,0201 | C7123_RF | CRITICAL | LMBRF |
| 152S2002 | 1 | IND,2.7NH,+/-0.1NH,600MA,0201,UH-Q | R6605_RF | CRITICAL | LMBRF |
| 131S0337 | 1 | CAP,1.5PF,+/-0.05PF,25V,0201,HQ | C6610_RF | CRITICAL | LMBRF |
| 118S0724 | 1 | RES,MF,0OHM,1/20W,0201 | R6606_RF | CRITICAL | LMBRF |
| 131S0275 | 1 | CAP,CER,C0G,0.3PF,+/-0.1PF,25V,0201,HQ | C6416_RF | CRITICAL | LMBRF |
| 118S0608 | 1 | RES,MF,1K OHM,1%,1/32W,01005 | R5911_RF | CRITICAL | LMBRF |
| 152S1356 | 1 | IND,10NH,3%,250MA,HI-Q,0201 | C6613_RF | CRITICAL | LMBRF |

## NOLMBRF:

| PART# | QTY | DESCRIPTION | REFERENCE DESIGNATOR(S) | CRITICAL | BOM OPTION |
|---|---|---|---|---|---|
| 131S0444 | 1 | DCS/PCS RX FILTER MATCH | R6301_RF | CRITICAL | NOLMBRF |
| 152S2020 | 1 | DCS/PCS RX FILTER MATCH | L6320_RF | CRITICAL | NOLMBRF |
| 155S00149 | 1 | DCS/PCS RX FILTER | GSMRX_RF | CRITICAL | NOLMBRF |
| 152S2005 | 1 | DCS/PCS RX MATCH (DCS) | L6318_RF | CRITICAL | NOLMBRF |
| 131S0319 | 1 | DCS/PCS RX MATCH (DCS) | C6332_RF | CRITICAL | NOLMBRF |
| 131S0630 | 1 | DCS/PCS RX MATCH (DCS) | C6340_RF | CRITICAL | NOLMBRF |
| 152S2005 | 1 | DCS/PCS RX MATCH (DCS) | L6319_RF | CRITICAL | NOLMBRF |
| 131S0385 | 1 | DCS/PCS RX MATCH (DCS) | C6333_RF | CRITICAL | NOLMBRF |
| 131S0630 | 1 | DCS/PCS RX MATCH (DCS) | C6341_RF | CRITICAL | NOLMBRF |
| 155S00163 | 1 | QUADPLEXER | PPLXR_RF | CRITICAL | NOLMBRF |
| 155S00199 | 1 | FLTR,DPX,PASS THRU,LB-MB-HB,SHLD,0805 | UATDI_RF | CRITICAL | NOLMBRF |
| 155S00234 | 1 | FLTR,DPX,PASS THRU,LB-MB-HB,UNSHLD,0805 | UPPDI_RF | CRITICAL | NOLMBRF |
| 118S0724 | 1 | RES,MF,0OHM,1/20W,0201 | R6404_RF | CRITICAL | NOLMBRF |
| 152S2044 | 1 | IND,2.2NH,+/-0.1NH,600MA,0201 | R7104_RF | CRITICAL | NOLMBRF |
| 152S00157 | 1 | 1.2NH,+/-0.05NH,1.1A,UH-Q,0201 | R6703_RF | CRITICAL | NOLMBRF |
| 131S0549 | 1 | 18PF,0201,25V | R6708_RF | CRITICAL | NOLMBRF |
| 131S0445 | 1 | CAP,CER,12PF,5%,25V,0201,HI-Q | R6606_RF | CRITICAL | NOLMBRF |

## D10 SPECIFIC:

| PART# | QTY | DESCRIPTION | REFERENCE DESIGNATOR(S) | CRITICAL | BOM OPTION |
|---|---|---|---|---|---|
| 131S0278 | 1 | CAP,CER,COG,1PF,+/-0.1PF,25V,0201,HI-Q | C7120_RF | CRITICAL | D10 |

## D11 SPECIFIC:

| PART# | QTY | DESCRIPTION | REFERENCE DESIGNATOR(S) | CRITICAL | BOM OPTION |
|---|---|---|---|---|---|
| 131S0425 | 1 | CAP,CER,COG,0.5PF,+/-0.05PF,25V,0201,HI-Q | C7120_RF | CRITICAL | D11 |

# PMU: CONTROL AND CLOCKS

| HW_REV_ID | R5505 | R5501 | REVISION |
|---|---|---|---|
| 0.10V | 887K | 51.1K | DEV1 |
| 0.20V | 422K | 51.1K | DEV2 |
| 0.30V | 255K | 51.1K | DEV 2.1 |
| 0.40V | 180K | 51.1K | DEV 3 |
| 0.50V | 124K | 51.1K | T181 |
| 0.60V | 102K | 51.1K | PP/P1 |
| 0.70V | 82.5K | 51.1K | DEV4 |
| 0.80V | 63.4K | 51.1K | P2 |
| 0.90V | 51.1K | 51.1K | DEV5 |
| 1.00V | 51.1K | 63.4K | EVT |
| 1.10V | 51.1K | 82.5K | EVT DOE |
| 1.20V | 50.0K | 100K | EVT ALT/CARBON |
| 1.30V | 39.0K | 100K | DEV6 |
| 1.40V | 14.7K | 51.1K | CARRIER |
| 1.50V | 40.2K | 200K | DVT |
| 1.60V | 6.34K | 51.1K | PVT |

## RESET AND CONTROL: PMU

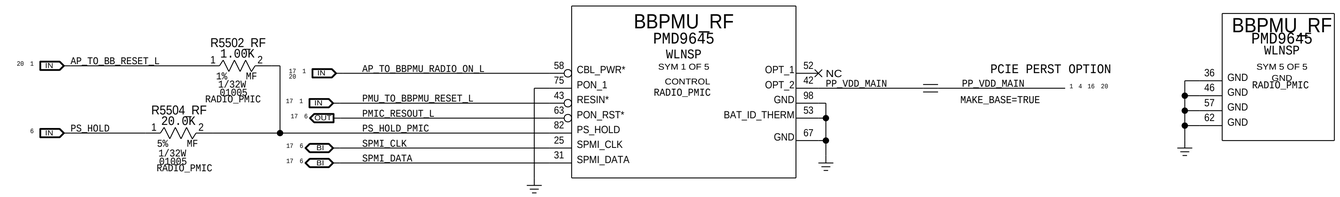


## MPPS AND GPIOS: PMU

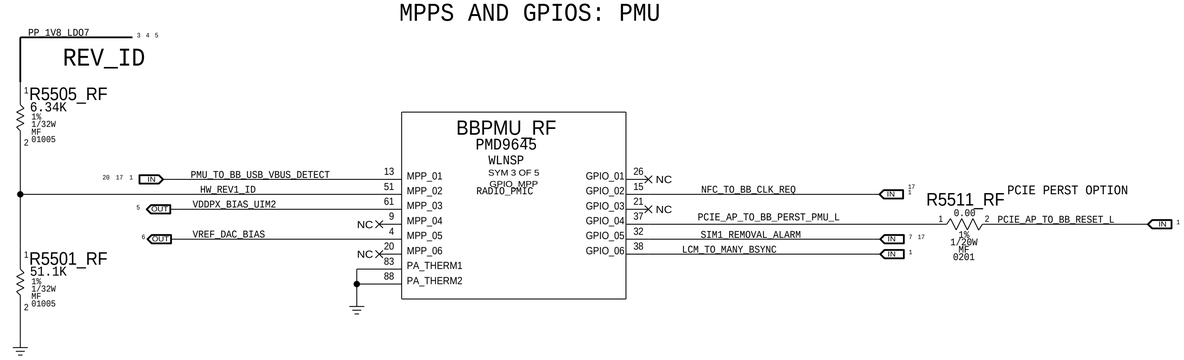


## XTAL AND CLOCK: PMU

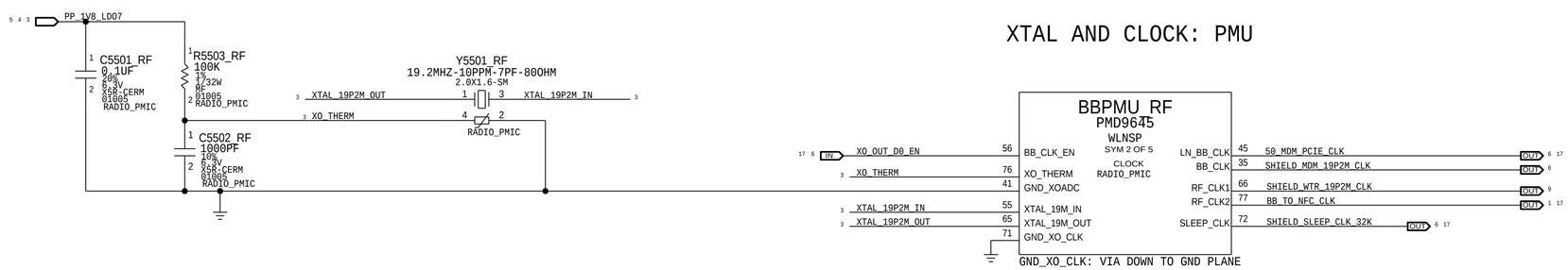


CONFIDENTIAL AND PROPRIETARY APPLE SYSTEM DESIGN. FOR REFERENCE PURPOSE ONLY - NOT A CHANGE REQUEST

SYNC_DATE=04/17/2015

PAGE TITLE
PAGE_TITLE=PMU: CONTROL AND CLOCKS

Apple Inc.

DRAWING NUMBER 051-00482 SIZE D

REVISION 8.0.0

BRANCH

PAGE 55 OF 72

SHEET 64 OF 81

NOTICE OF PROPRIETARY PROPERTY:
THE INFORMATION CONTAINED HEREIN IS THE PROPRIETARY PROPERTY OF APPLE INC.
THE POSESSOR AGREES TO THE FOLLOWING:
I TO MAINTAIN THIS DOCUMENT IN CONFIDENCE
II NOT TO REPRODUCE OR COPY IT
III NOT TO REVEAL OR PUBLISH IT IN WHOLE OR PART
IV ALL RIGHTS RESERVED

# PMU: SWITCHERS AND LDOS

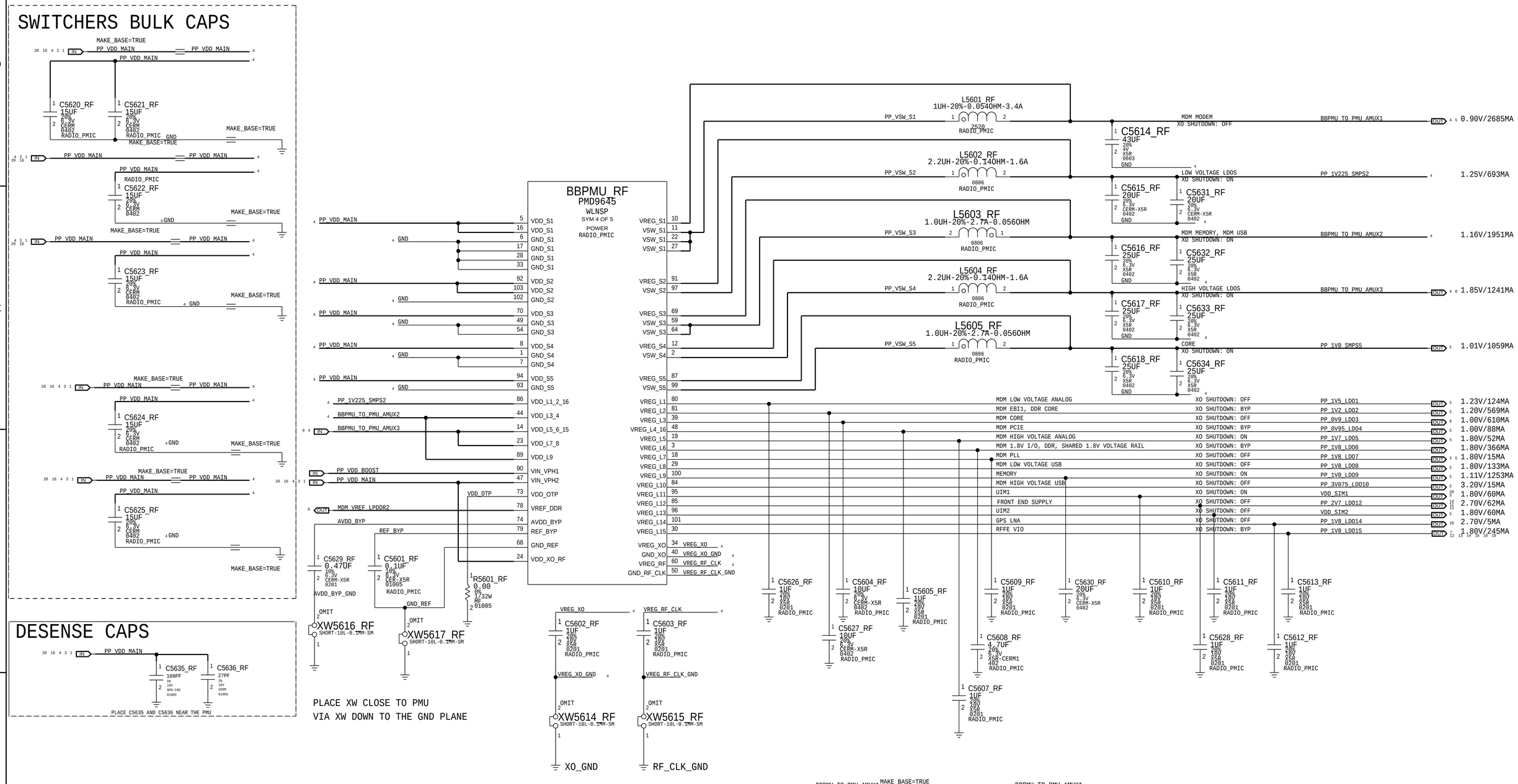


SYNC_DATE=04/17/2015

PAGE TITLE: PAGE_TITLE=PMU: SWITCHERS AND LDOS

Apple Inc.

DRAWING NUMBER: 051-00482 | SIZE: D

REVISION: 8.0.0

BRANCH

PAGE: 56 OF 72

SHEET: 65 OF 81

NOTICE OF PROPRIETARY PROPERTY:
THE INFORMATION CONTAINED HEREIN IS THE PROPRIETARY PROPERTY OF APPLE INC.
THE POSESSOR AGREES TO THE FOLLOWING:
I TO MAINTAIN THIS DOCUMENT IN CONFIDENCE
II NOT TO REPRODUCE OR COPY IT
III NOT TO REVEAL OR PUBLISH IT IN WHOLE OR PART
IV ALL RIGHTS RESERVED

CONFIDENTIAL AND PROPRIETARY APPLE SYSTEM DESIGN. FOR REFERENCE PURPOSE ONLY - NOT A CHANGE REQUEST

# BASEBAND: POWER

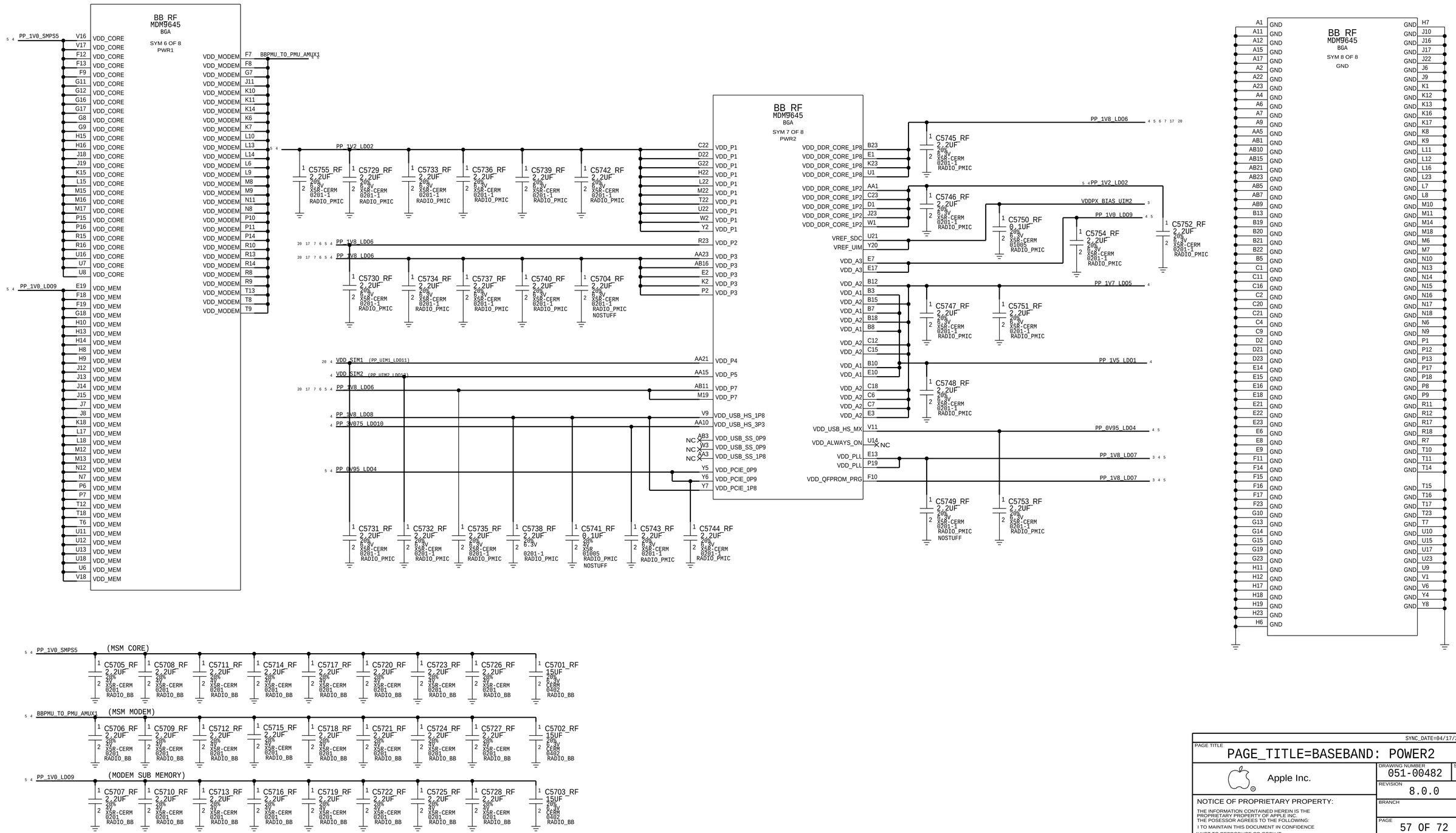


CONFIDENTIAL AND PROPRIETARY APPLE SYSTEM DESIGN. FOR REFERENCE PURPOSE ONLY - NOT A CHANGE REQUEST

SYNC_DATE=04/17/2015

PAGE TITLE: PAGE_TITLE=BASEBAND: POWER2

Apple Inc.

DRAWING NUMBER: 051-00482 SIZE: D

REVISION: 8.0.0

BRANCH

PAGE: 57 OF 72

SHEET: 66 OF 81

NOTICE OF PROPRIETARY PROPERTY:
THE INFORMATION CONTAINED HEREIN IS THE PROPRIETARY PROPERTY OF APPLE INC.
THE POSESSOR AGREES TO THE FOLLOWING:
I TO MAINTAIN THIS DOCUMENT IN CONFIDENCE
II NOT TO REPRODUCE OR COPY IT
III NOT TO REVEAL OR PUBLISH IT IN WHOLE OR PART
IV ALL RIGHTS RESERVED

# BASEBAND: CONTROL AND INTERFACES

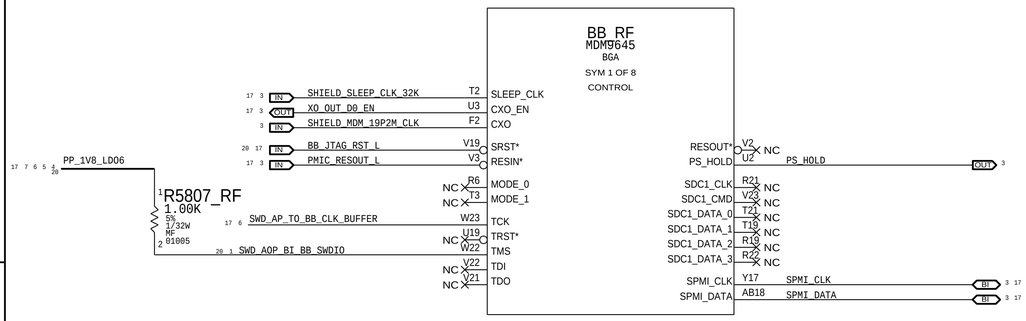


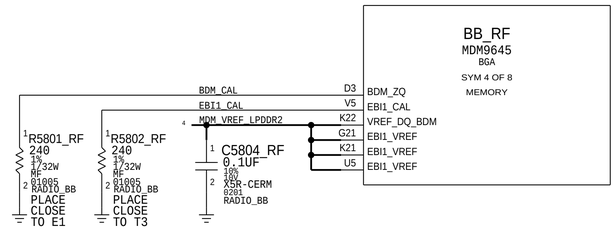


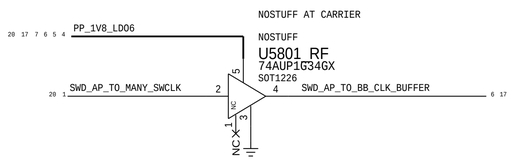


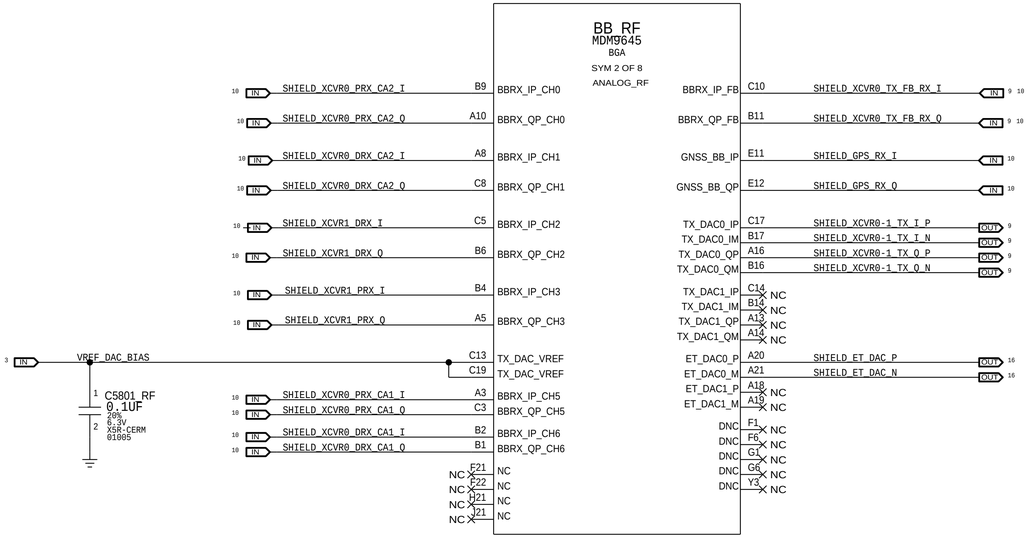


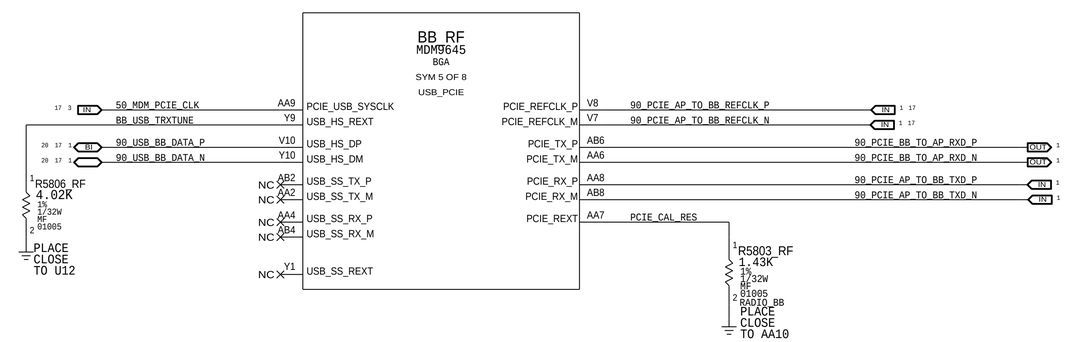


SYNC_DATE=04/17/2015

PAGE TITLE
PAGE_TITLE=BASEBAND: CONTROL

Apple Inc.

DRAWING NUMBER 051-00482 SIZE D

REVISION 8.0.0

BRANCH

PAGE 58 OF 72

SHEET 67 OF 81


NOTICE OF PROPRIETARY PROPERTY:

THE INFORMATION CONTAINED HEREIN IS THE PROPRIETARY PROPERTY OF APPLE INC.
THE POSESSOR AGREES TO THE FOLLOWING:
I TO MAINTAIN THIS DOCUMENT IN CONFIDENCE
II NOT TO REPRODUCE OR COPY IT
III NOT TO REVEAL OR PUBLISH IT IN WHOLE OR PART
IV ALL RIGHTS RESERVED

CONFIDENTIAL AND PROPRIETARY APPLE SYSTEM DESIGN. FOR REFERENCE PURPOSE ONLY - NOT A CHANGE REQUEST

# BASEBAND: GPIOS

| SKU | R5911_RF | R5912_RF |
|---|---|---|
| ROW | NOSTUFF | NOSTUFF |
| JP | 1.0 KOHM | NOSTUFF |

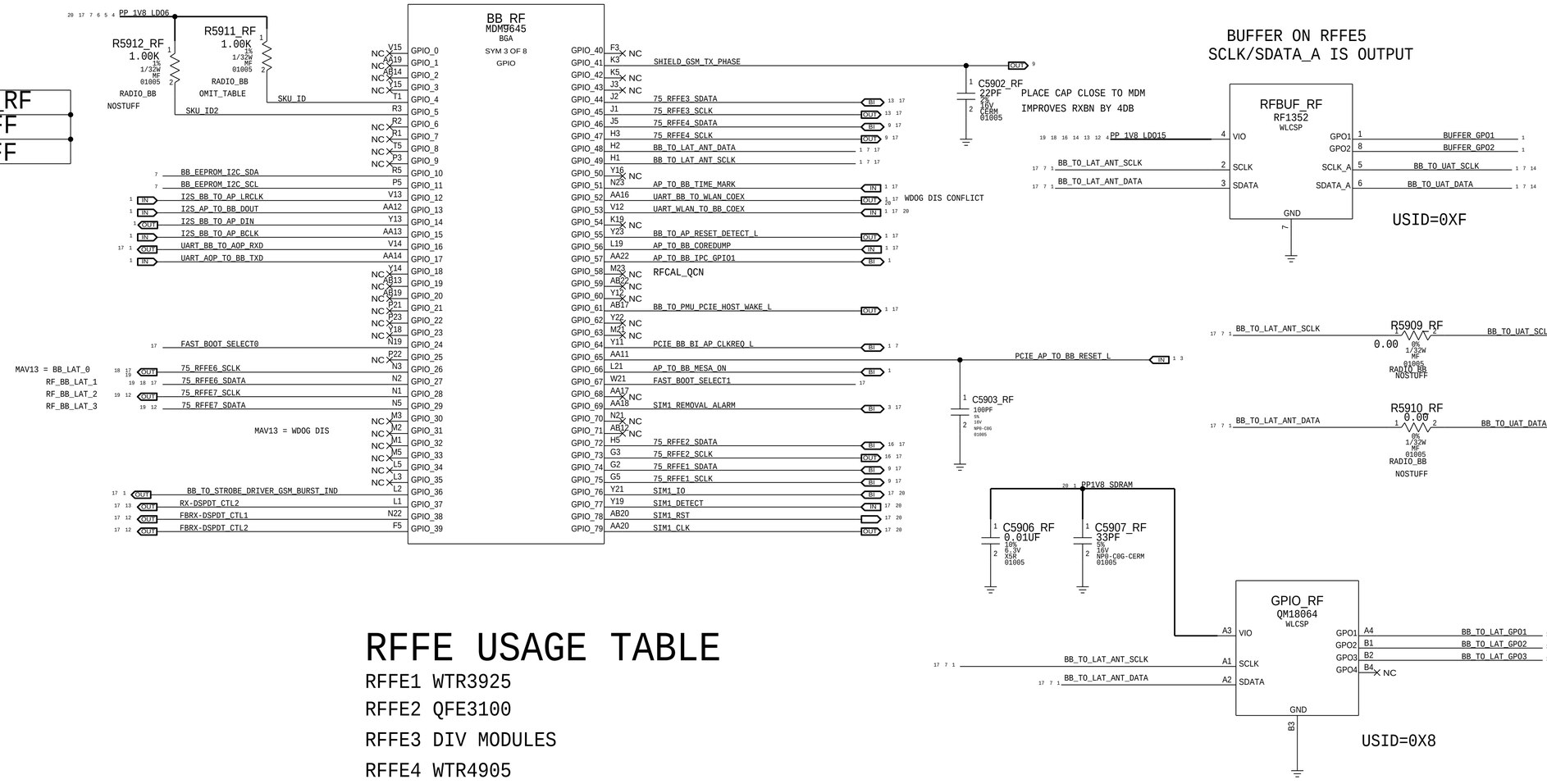


## RFFE USAGE TABLE

RFFE1 WTR3925
RFFE2 QFE3100
RFFE3 DIV MODULES
RFFE4 WTR4905
RFFE5 TUNERS + ELNAS
RFFE6 2G PA,MLB PA,MB/HB TDD PA,MB/HB FDD PA
RFFE7 LB PA, COUPLERS

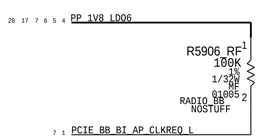


PCIE PULL-UPS TO BB RAIL

## BB EEPROM

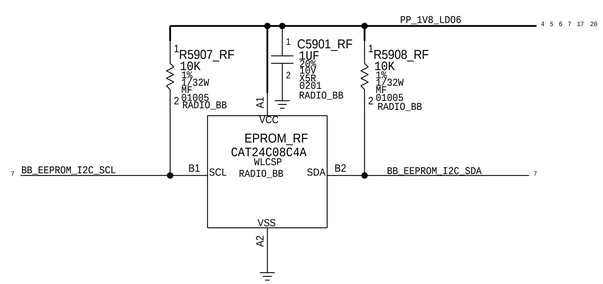


CONFIDENTIAL AND PROPRIETARY APPLE SYSTEM DESIGN. FOR REFERENCE PURPOSE ONLY - NOT A CHANGE REQUEST

SYNC_DATE=04/17/2015

PAGE TITLE: BASEBAND GPIOS

Apple Inc.

DRAWING NUMBER: 051-00482 SIZE: D

REVISION: 8.0.0

BRANCH:

PAGE: 59 OF 72

SHEET: 68 OF 81

NOTICE OF PROPRIETARY PROPERTY:
THE INFORMATION CONTAINED HEREIN IS THE PROPRIETARY PROPERTY OF APPLE INC.
THE POSESSOR AGREES TO THE FOLLOWING:
I TO MAINTAIN THIS DOCUMENT IN CONFIDENCE
II NOT TO REPRODUCE OR COPY IT
III NOT TO REVEAL OR PUBLISH IT IN WHOLE OR PART
IV ALL RIGHTS RESERVED

# TRANSCEIVER: POWER

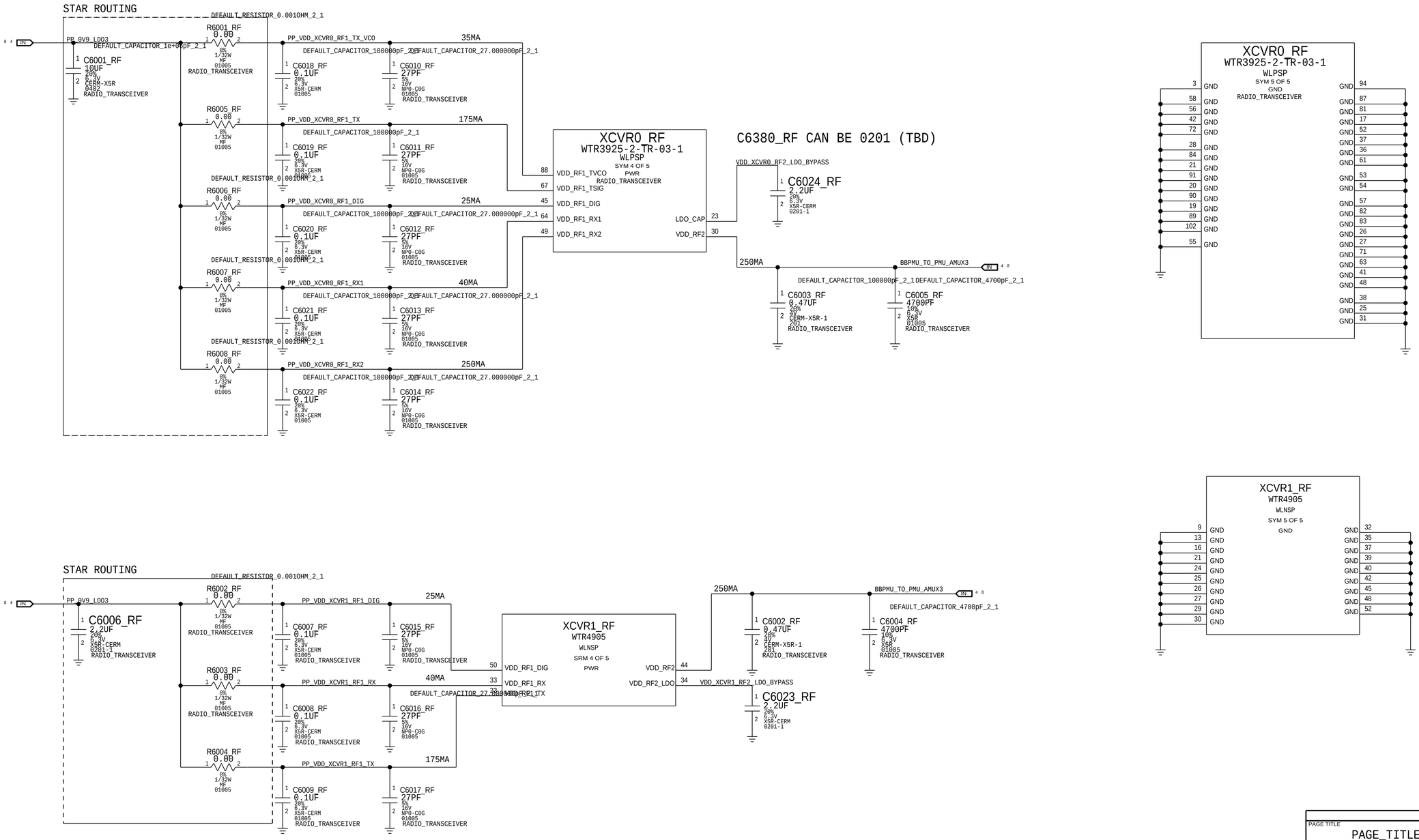


| | |
|---|---|
| PAGE TITLE | PAGE_TITLE=TRANSCEIVER0/1: POWER |
| Apple Inc. | DRAWING NUMBER 051-00482 SIZE D |
| | REVISION 8.0.0 |
| NOTICE OF PROPRIETARY PROPERTY: THE INFORMATION CONTAINED HEREIN IS THE PROPRIETARY PROPERTY OF APPLE INC. THE POSESSOR AGREES TO THE FOLLOWING: I TO MAINTAIN THIS DOCUMENT IN CONFIDENCE II NOT TO REPRODUCE OR COPY IT III NOT TO REVEAL OR PUBLISH IT IN WHOLE OR PART IV ALL RIGHTS RESERVED | BRANCH |
| | PAGE 60 OF 72 |
| | SHEET 69 OF 81 |

SYNC_DATE=04/17/2015

CONFIDENTIAL AND PROPRIETARY APPLE SYSTEM DESIGN. FOR REFERENCE PURPOSE ONLY - NOT A CHANGE REQUEST

# TRANSCEIVER: TX PORTS

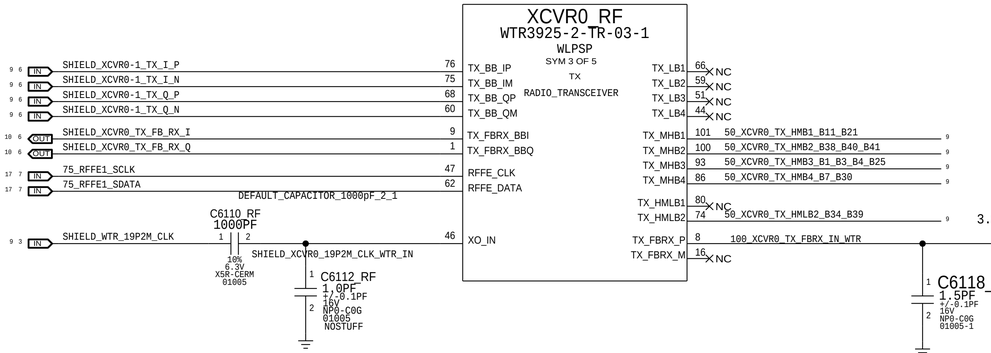


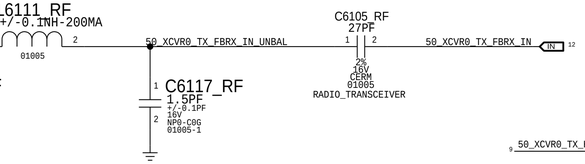

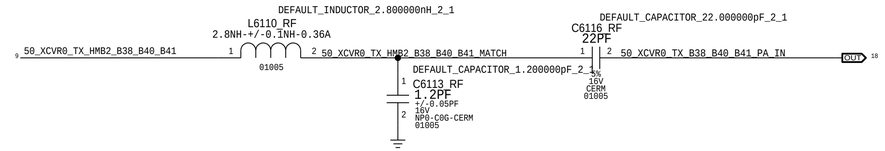


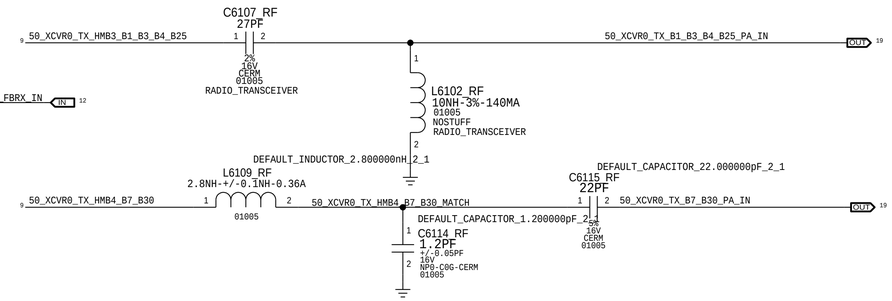

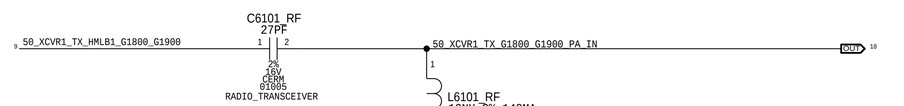


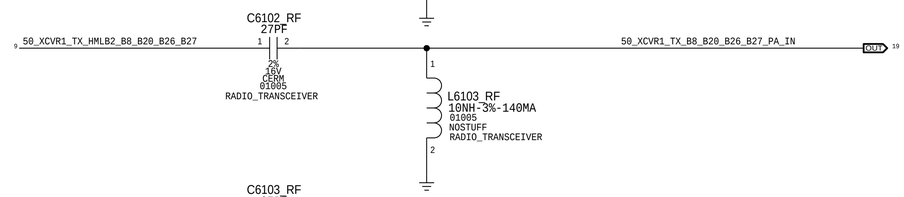


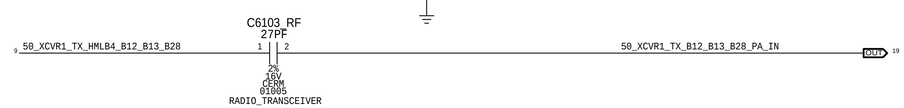


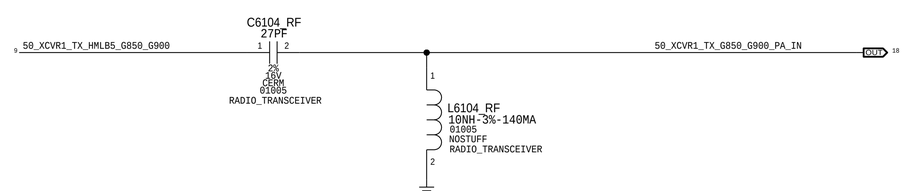


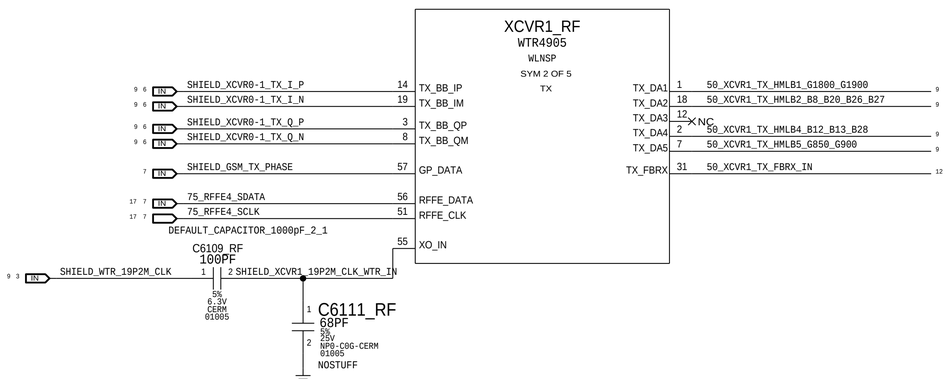


CONFIDENTIAL AND PROPRIETARY APPLE SYSTEM DESIGN. FOR REFERENCE PURPOSE ONLY - NOT A CHANGE REQUEST

SYNC_DATE=04/17/2015

OFFPAGE TITLE

TRANSCEIVER0/1: TX PORTS

Apple Inc.

| | |
|---|---|
| DRAWING NUMBER | 051-00482 |
| SIZE | D |
| REVISION | 8.0.0 |
| BRANCH | |
| PAGE | 61 OF 72 |
| SHEET | 70 OF 81 |

NOTICE OF PROPRIETARY PROPERTY:

THE INFORMATION CONTAINED HEREIN IS THE PROPRIETARY PROPERTY OF APPLE INC.
THE POSESSOR AGREES TO THE FOLLOWING:
I TO MAINTAIN THIS DOCUMENT IN CONFIDENCE
II NOT TO REPRODUCE OR COPY IT
III NOT TO REVEAL OR PUBLISH IT IN WHOLE OR PART
IV ALL RIGHTS RESERVED

# TRANSCEIVER: PRX, DRX, & GPS PORTS

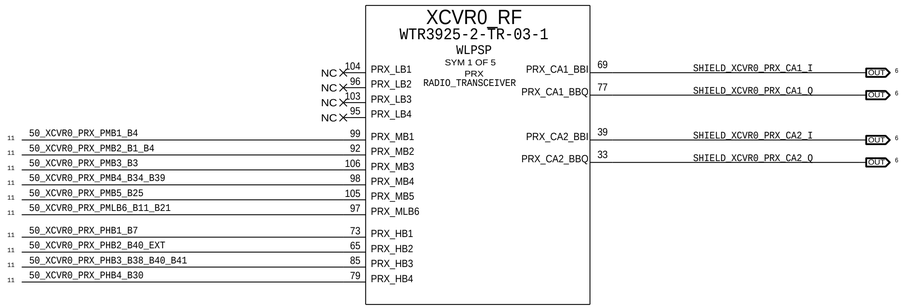


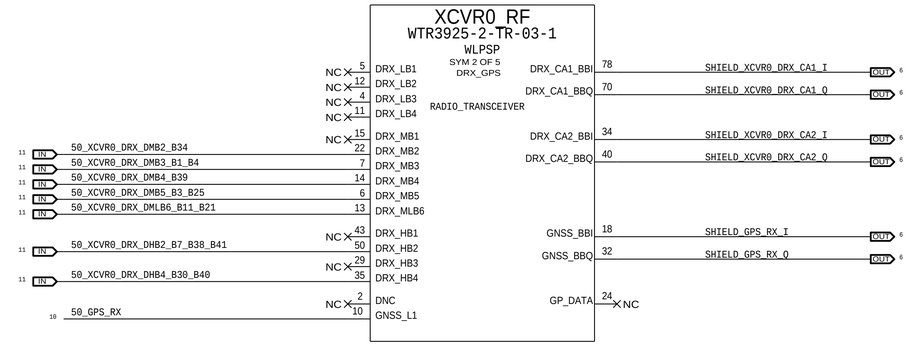


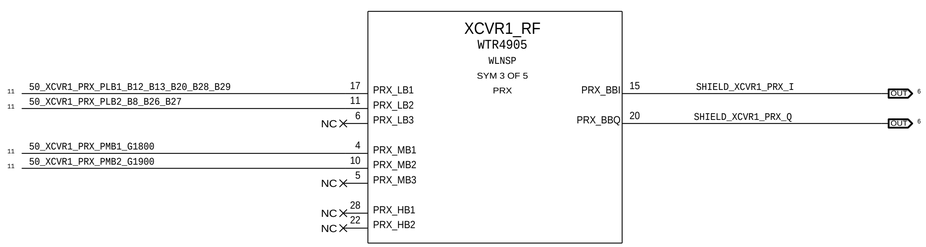


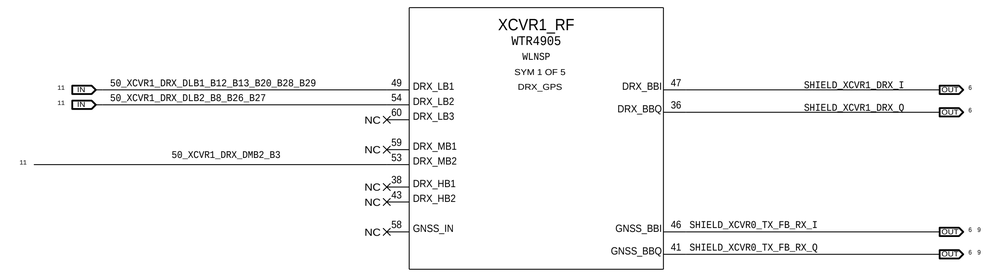


# GPS FILTER

## PLACE NEAR U_WTR

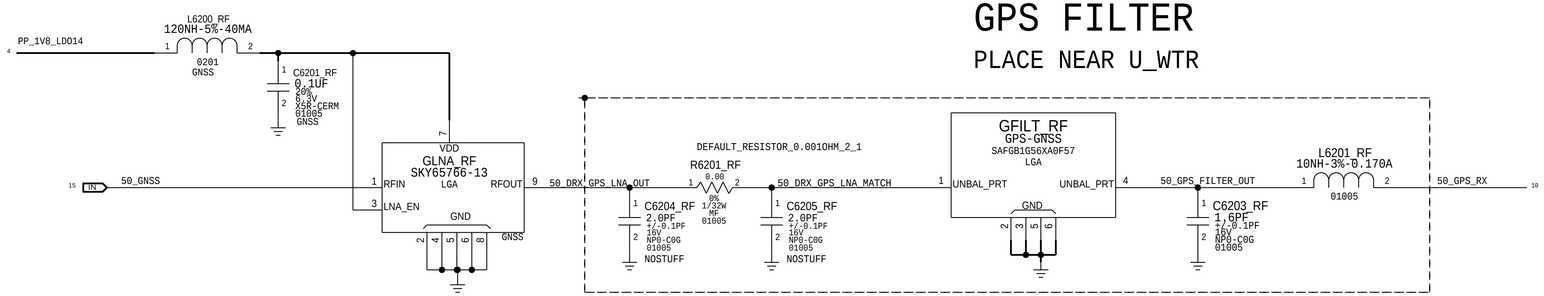


CONFIDENTIAL AND PROPRIETARY APPLE SYSTEM DESIGN. FOR REFERENCE PURPOSE ONLY - NOT A CHANGE REQUEST

SYNC_DATE=04/17/2015

PAGE TITLE
PAGE_TITLE=TRANSCEIVER0/1: PRX PORTS

Apple Inc.

DRAWING NUMBER 051-00482 SIZE D

REVISION 8.0.0

BRANCH

PAGE 62 OF 72

SHEET 71 OF 81

NOTICE OF PROPRIETARY PROPERTY:
THE INFORMATION CONTAINED HEREIN IS THE PROPRIETARY PROPERTY OF APPLE INC.
THE POSESSOR AGREES TO THE FOLLOWING:
I TO MAINTAIN THIS DOCUMENT IN CONFIDENCE
II NOT TO REPRODUCE OR COPY IT
III NOT TO REVEAL OR PUBLISH IT IN WHOLE OR PART
IV ALL RIGHTS RESERVED

# PRIMARY & DIVERSITY RECEIVE MATCHING

DC BLOCKING CAP VALUES CANNOT BE MORE THAN 33PF

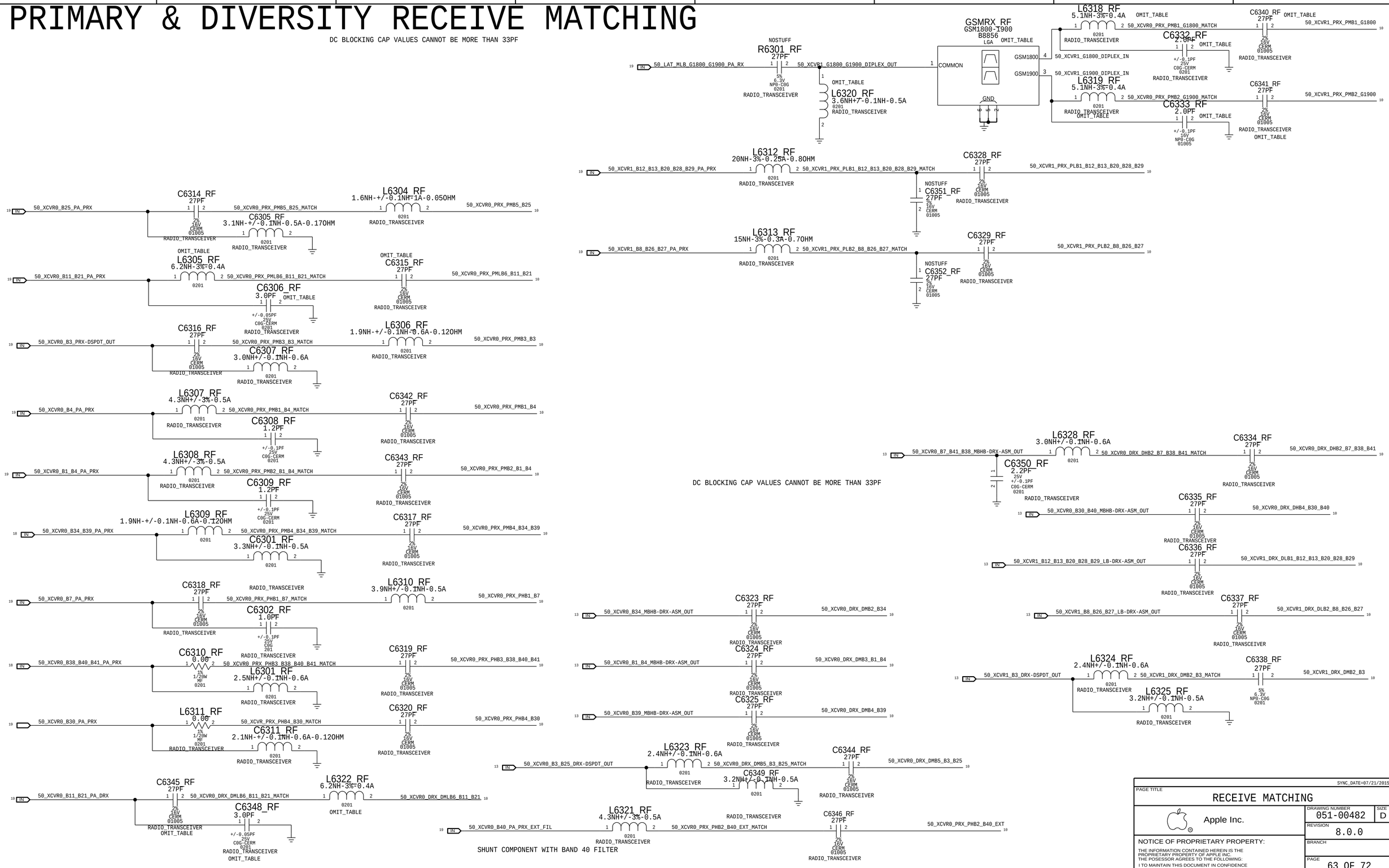


CONFIDENTIAL AND PROPRIETARY APPLE SYSTEM DESIGN. FOR REFERENCE PURPOSE ONLY - NOT A CHANGE REQUEST

SYNC_DATE=07/21/2015

PAGE TITLE: RECEIVE MATCHING

Apple Inc.

DRAWING NUMBER: 051-00482 | SIZE: D

REVISION: 8.0.0

BRANCH:

PAGE: 63 OF 72

SHEET: 72 OF 81

NOTICE OF PROPRIETARY PROPERTY:
THE INFORMATION CONTAINED HEREIN IS THE PROPRIETARY PROPERTY OF APPLE INC.
THE POSESSOR AGREES TO THE FOLLOWING:
I TO MAINTAIN THIS DOCUMENT IN CONFIDENCE
II NOT TO REPRODUCE OR COPY IT
III NOT TO REVEAL OR PUBLISH IT IN WHOLE OR PART
IV ALL RIGHTS RESERVED

# LOWER ANTENNA AND COUPLER

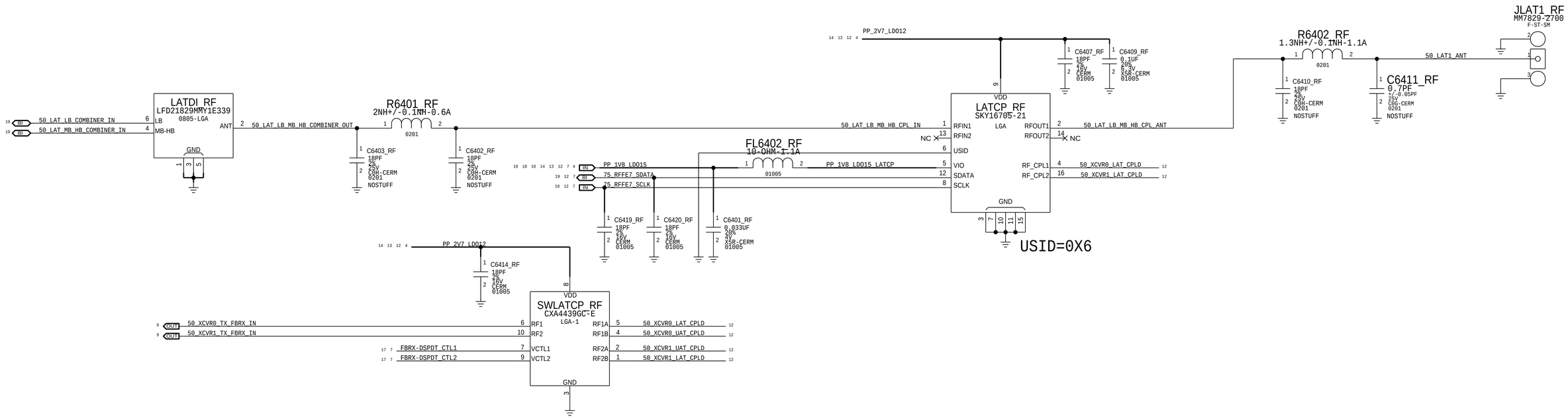


# UPPER ANTENNA COUPLER

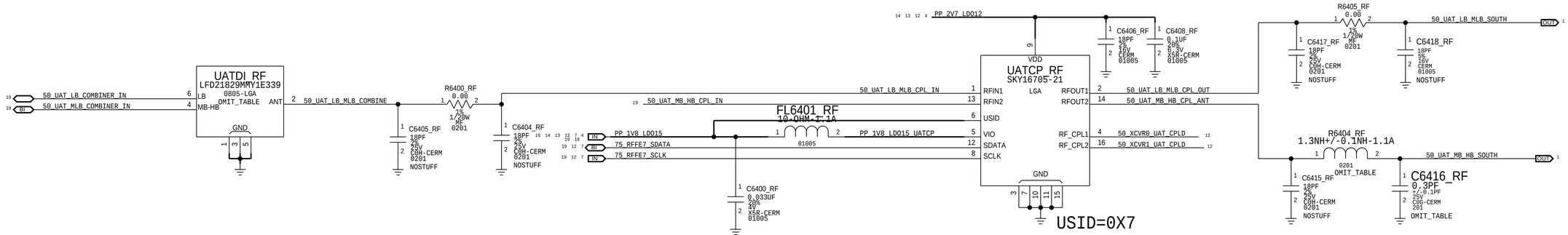


SYNC_DATE=04/17/2015

PAGE TITLE
PAGE_TITLE=LOWER ANTENNA & COUPLERS

Apple Inc.

DRAWING NUMBER 051-00482 SIZE D

REVISION 8.0.0

BRANCH

PAGE 64 OF 72

SHEET 73 OF 81

NOTICE OF PROPRIETARY PROPERTY:
THE INFORMATION CONTAINED HEREIN IS THE PROPRIETARY PROPERTY OF APPLE INC.
THE POSESSOR AGREES TO THE FOLLOWING:
I TO MAINTAIN THIS DOCUMENT IN CONFIDENCE
II NOT TO REPRODUCE OR COPY IT
III NOT TO REVEAL OR PUBLISH IT IN WHOLE OR PART
IV ALL RIGHTS RESERVED

# DIVERSITY RECEIVE

## LB DRX ASM

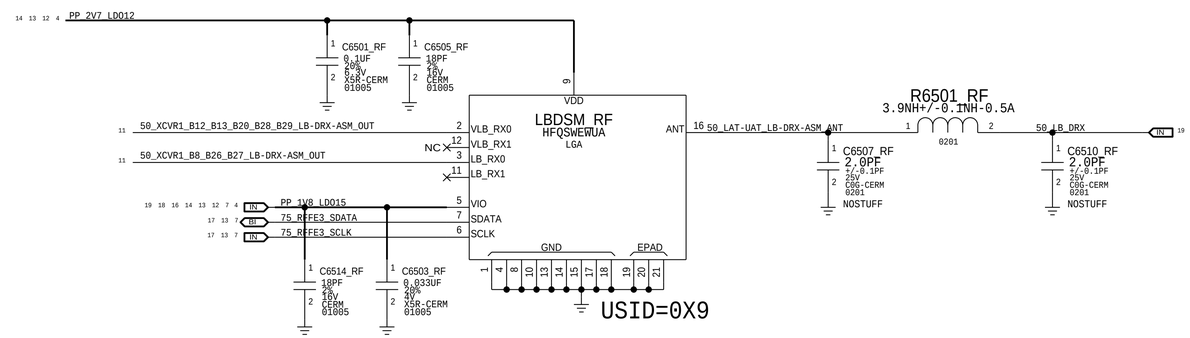


## MB HB DRX ASM

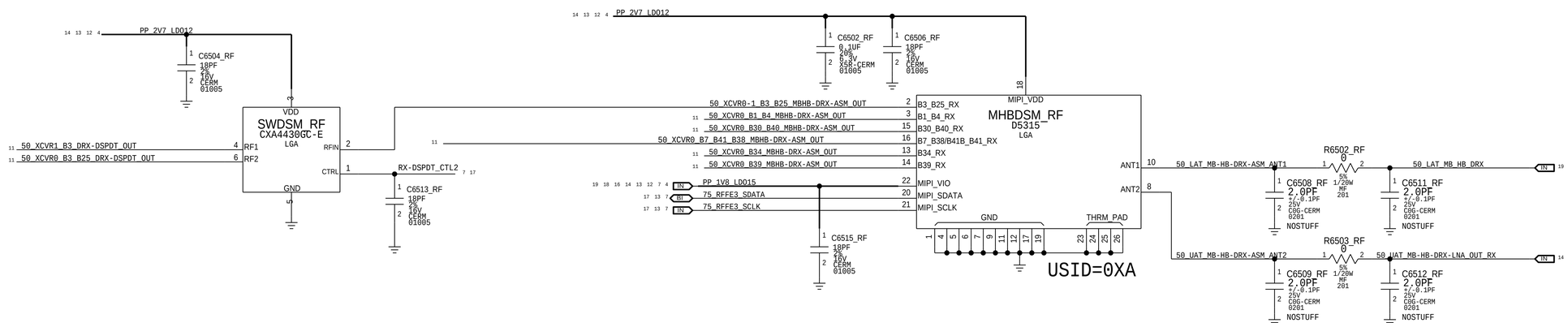


SYNC_DATE=04/17/2015

PAGE TITLE
PAGE_TITLE=DIVERSITY RECEIVE ASM'S

Apple Inc.

DRAWING NUMBER 051-00482 | SIZE D

REVISION 8.0.0

BRANCH

PAGE 65 OF 72

SHEET 74 OF 81


NOTICE OF PROPRIETARY PROPERTY:

THE INFORMATION CONTAINED HEREIN IS THE PROPRIETARY PROPERTY OF APPLE INC.
THE POSESSOR AGREES TO THE FOLLOWING:
I TO MAINTAIN THIS DOCUMENT IN CONFIDENCE
II NOT TO REPRODUCE OR COPY IT
III NOT TO REVEAL OR PUBLISH IT IN WHOLE OR PART
IV ALL RIGHTS RESERVED

# DIVERSITY RECEIVE LNAS

## LB DRX LNA

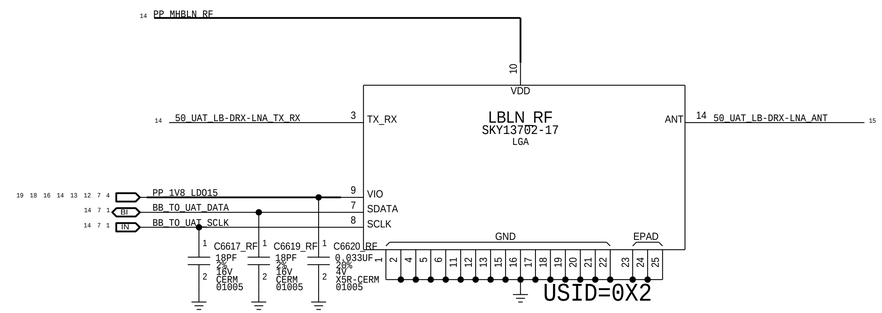


## MB/HB DRX LNA

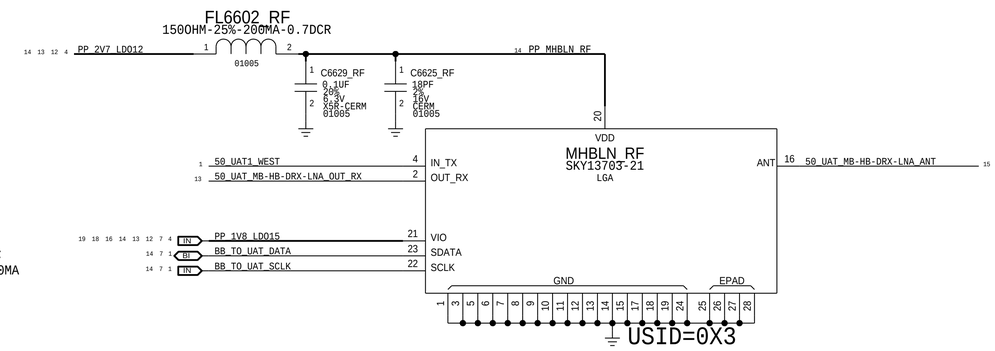


## MLB DRX LNA

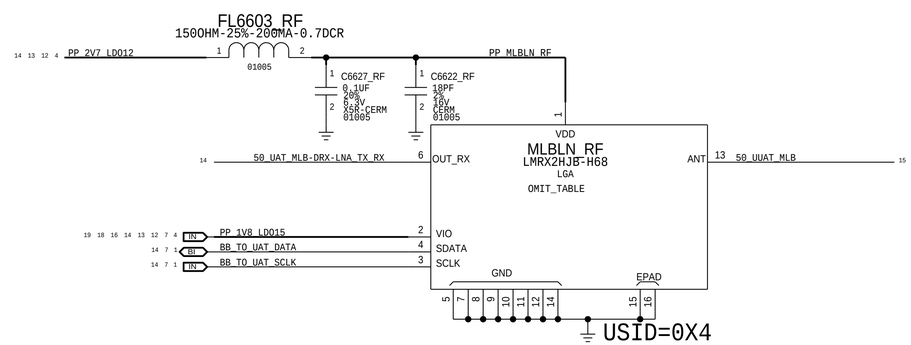


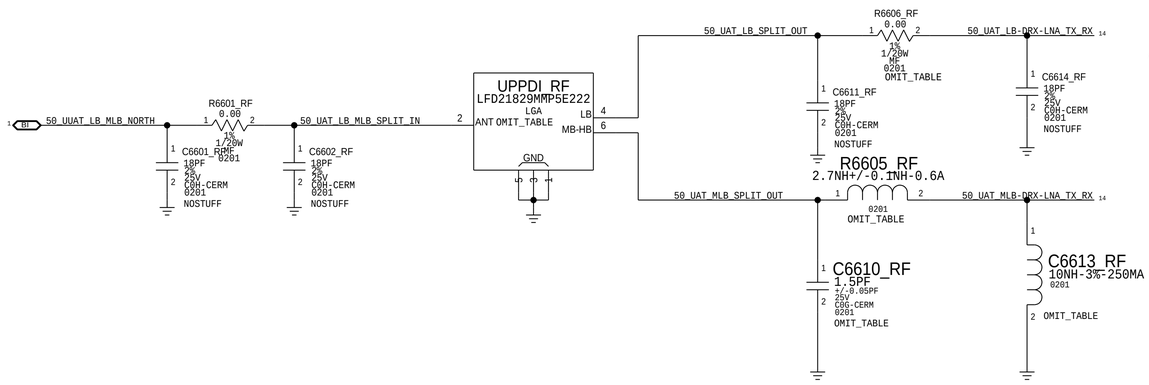


SYNC_DATE=04/17/2015

PAGE TITLE: DIVERSITY RECEIVE LNA'S

Apple Inc.

DRAWING NUMBER: 051-00482 SIZE: D

REVISION: 8.0.0

BRANCH:

PAGE: 66 OF 72

SHEET: 75 OF 81


NOTICE OF PROPRIETARY PROPERTY:

THE INFORMATION CONTAINED HEREIN IS THE PROPRIETARY PROPERTY OF APPLE INC.
THE POSESSOR AGREES TO THE FOLLOWING:
I TO MAINTAIN THIS DOCUMENT IN CONFIDENCE
II NOT TO REPRODUCE OR COPY IT
III NOT TO REVEAL OR PUBLISH IT IN WHOLE OR PART
IV ALL RIGHTS RESERVED


CDS_LIB=apple

# UPPER ANTENNA FEEDS

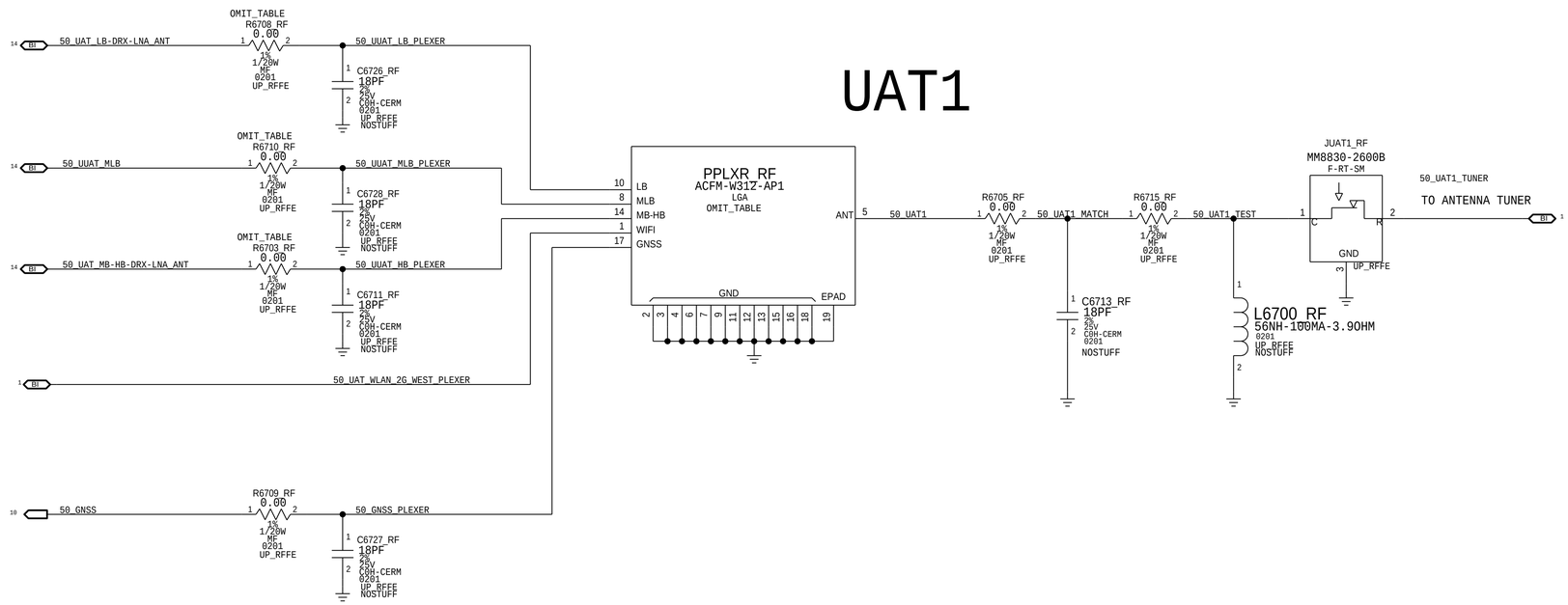


SYNC_DATE=04/17/2015

PAGE TITLE
PAGE_TITLE=UPPER ANTENNA FEEDS

Apple Inc.

DRAWING NUMBER 051-00482 SIZE D

REVISION 8.0.0

BRANCH

PAGE 67 OF 72

SHEET 76 OF 81

NOTICE OF PROPRIETARY PROPERTY:
THE INFORMATION CONTAINED HEREIN IS THE PROPRIETARY PROPERTY OF APPLE INC.
THE POSESSOR AGREES TO THE FOLLOWING:
I TO MAINTAIN THIS DOCUMENT IN CONFIDENCE
II NOT TO REPRODUCE OR COPY IT
III NOT TO REVEAL OR PUBLISH IT IN WHOLE OR PART
IV ALL RIGHTS RESERVED

# PMU: ET MODULATOR

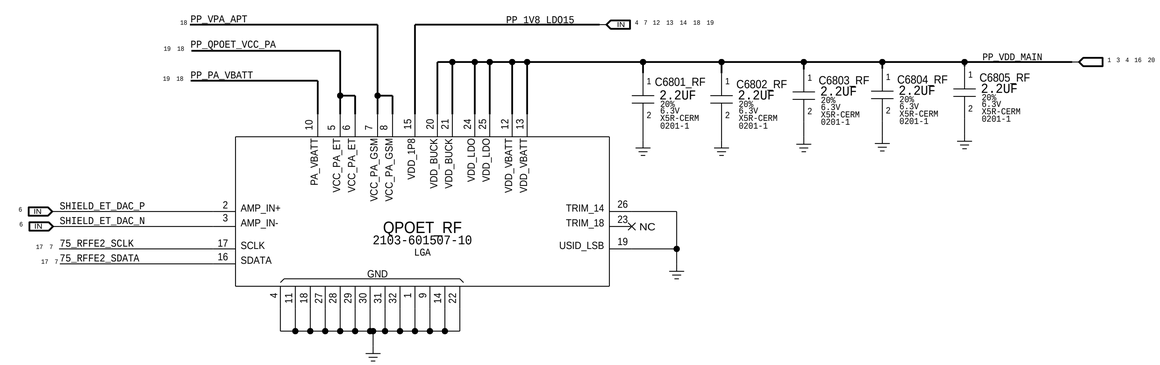


## DESENSE CAPS

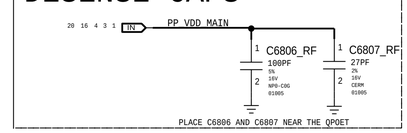


CONFIDENTIAL AND PROPRIETARY APPLE SYSTEM DESIGN. FOR REFERENCE PURPOSE ONLY - NOT A CHANGE REQUEST

| | |
|---|---|
| PAGE TITLE | PMU: ET MODULATOR |
| Apple Inc. | DRAWING NUMBER 051-00482 SIZE D |
| | REVISION 8.0.0 |
| NOTICE OF PROPRIETARY PROPERTY: | BRANCH |
| THE INFORMATION CONTAINED HEREIN IS THE PROPRIETARY PROPERTY OF APPLE INC. THE POSESSOR AGREES TO THE FOLLOWING: I TO MAINTAIN THIS DOCUMENT IN CONFIDENCE II NOT TO REPRODUCE OR COPY IT III NOT TO REVEAL OR PUBLISH IT IN WHOLE OR PART IV ALL RIGHTS RESERVED | PAGE 68 OF 72 |
| | SHEET 77 OF 81 |

# MLB TEST POINTS

## BASEBAND

PP7000_RF
P2MM-NSM
SM
PP 1 75_RFFE1_SDATA 7 9
OMIT

PP6952_RF
P2MM-NSM
SM
PP 1 75_RFFE1_SCLK 7 9
OMIT

PP6943_RF
P2MM-NSM
SM
PP 1 75_RFFE2_SDATA 7 16
OMIT

PP6944_RF
P2MM-NSM
SM
PP 1 75_RFFE2_SCLK 7 16
OMIT

PP6939_RF
P2MM-NSM
SM
PP 1 75_RFFE3_SDATA 7 13
OMIT

PP6940_RF
P2MM-NSM
SM
PP 1 75_RFFE3_SCLK 7 13
OMIT

PP6941_RF
P2MM-NSM
SM
PP 1 75_RFFE4_SDATA 7 9
OMIT

PP6942_RF
P2MM-NSM
SM
PP 1 75_RFFE4_SCLK 7 9
OMIT

PP6903_RF
P2MM-NSM
SM
PP 1 BB_TO_LAT_ANT_DATA 1 7
OMIT

PP6904_RF
P2MM-NSM
SM
PP 1 BB_TO_LAT_ANT_SCLK 1 7
OMIT

PP6935_RF
P2MM-NSM
SM
PP 1 75_RFFE6_SCLK 7 18 19
OMIT

PP6936_RF
P2MM-NSM
SM
PP 1 75_RFFE6_SDATA 7 18 19
OMIT

PP6906_RF
P2MM-NSM
SM
PP 1 SWD_AP_TO_BB_CLK_BUFFER 6
OMIT

PP6907_RF
P2MM-NSM
SM
PP 1 PMU_TO_BB_USB_VBUS_DETECT 1 3 20
OMIT

PP6908_RF
P2MM-NSM
SM
PP 1 NFC_TO_BB_CLK_REQ 1 3
OMIT

PP6909_RF
P2MM-NSM
SM
PP 1 SIM1_REMOVAL_ALARM 3 7
OMIT

PP6911_RF
P2MM-NSM
SM
PP 1 50_MDM_PCIE_CLK 3 6
OMIT

PP6912_RF
P2MM-NSM
SM
PP 1 XO_OUT_D0_EN 3 6
OMIT

PP6913_RF
P2MM-NSM
SM
PP 1 BB_TO_NFC_CLK 1 3
OMIT

PP6914_RF
P2MM-NSM
SM
PP 1 SHIELD_SLEEP_CLK_32K 3 6
OMIT

PP6933_RF
P2MM-NSM
SM
PP 1 BB_TO_STROBE_DRIVER_GSM_BURST_IND
OMIT

PP6917_RF
P2MM-NSM
SM
PP 1 UART_BB_TO_WLAN_COEX 1 7 20
OMIT

PP6918_RF
P2MM-NSM
SM
PP 1 UART_WLAN_TO_BB_COEX 1 7 20
OMIT

PP6919_RF
P2MM-NSM
SM
PP 1 BB_JTAG_RST_L 6 20
OMIT

PP6920_RF
P2MM-NSM
SM
PP 1 FBRX-DSPDT_CTL1 7 12
OMIT

PP6921_RF
P2MM-NSM
SM
PP 1 FBRX-DSPDT_CTL2 7 12
OMIT

PP6923_RF
P2MM-NSM
SM
PP 1 BB_TO_PMU_PCIE_HOST_WAKE_L 1 7
OMIT

PP6924_RF
P2MM-NSM
SM
PP 1 SPMI_CLK 3 6
OMIT

PP6925_RF
P2MM-NSM
SM
PP 1 SPMI_DATA 3 6
OMIT

PP6926_RF
P2MM-NSM
SM
PP 1 UART_BB_TO_AOP_RXD 1 7
OMIT

PP6929_RF
P2MM-NSM
SM
PP 1 AP_TO_BB_TIME_MARK 1 7
OMIT

PP6930_RF
P2MM-NSM
SM
PP 1 BB_TO_AP_RESET_DETECT_L 1 7
OMIT

PP6931_RF
P2MM-NSM
SM
PP 1 AP_TO_BB_COREDUMP 1 7
OMIT

PP6938_RF
P2MM-NSM
SM
PP 1 RX-DSPDT_CTL2 7 13
OMIT

## PCIE

PP6915_RF
P2MM-NSM
SM
PP 1 90_PCIE_AP_TO_BB_REFCLK_P 1 6
OMIT

PP6916_RF
P2MM-NSM
SM
PP 1 90_PCIE_AP_TO_BB_REFCLK_N 1 6
OMIT

## PCIE GND

PP6970_RF
P2MM-NSM
SM
PP 1
OMIT

PP6971_RF
P2MM-NSM
SM
PP 1
OMIT

## BBPMU

PP6945_RF
P2MM-NSM
SM
PP 1 PMIC_RESOUT_L 3 6
OMIT

PP6905_RF
P2MM-NSM
SM
PP 1 AP_TO_BBPMU_RADIO_ON_L 1 3 20
OMIT

PP6900_RF
P2MM-NSM
SM
PP 1 PMU_TO_BBPMU_RESET_L 1 3
OMIT

## SIM

PP6953_RF
P2MM-NSM
SM
PP 1 SIM1_IO 7 20
OMIT

PP6969_RF
P2MM-NSM
SM
PP 1 SIM1_DETECT 7 20
OMIT

PP6972_RF
P2MM-NSM
SM
PP 1 SIM1_RST 7 20
OMIT

PP6973_RF
P2MM-NSM
SM
PP 1 SIM1_CLK 7 20
OMIT

PP6974_RF
P2MM-NSM
SM
PP 1 90_USB_BB_DATA_P 1 6 20
OMIT

PP6977_RF
P2MM-NSM
SM
PP 1 90_USB_BB_DATA_N 1 6 20
OMIT

## BOOT CONFIG

DEFAULT FAST_BOOT[2:0]
USB = 0X2

20 7 6 5 4 PP_1V8_LDO6

NOSTUFF
R6921_RF
10K
1%
1/32W
MF
01005
RADIO_DEBUG

R6922_RF
10K
1%
1/32W
MF
01005
RADIO_DEBUG

7 FAST_BOOT_SELECT1
7 FAST_BOOT_SELECT0

## ICEFALL

PP6978_RF
P2MM-NSM
SM
PP 1 AP_TO_ICEFALL_FW_DWLD_REQ 1 20
OMIT

PP6979_RF
P2MM-NSM
SM
PP 1 SIM1_SWP 20
OMIT

PP6980_RF
P2MM-NSM
SM
PP 1 SE2_SWP 20
OMIT

PP6981_RF
P2MM-NSM
SM
PP 1 ICEFALL_LDO_ENABLE 1 20
OMIT

PP7500_RF
P2MM-NSM
SM
PP 1 SE2_READY 1 20
OMIT

PP7501_RF
P2MM-NSM
SM
PP 1 NFC_SWP_MUX 1 20
OMIT

PP7502_RF
P2MM-NSM
SM
PP 1 SE2_PWR_REQ 1 20
OMIT

| | |
|---|---|
| PAGE TITLE | TEST POINTS & BOOT CONFIG |
| Apple Inc. | DRAWING NUMBER 051-00482 SIZE D |
| | REVISION 8.0.0 |
| | BRANCH |
| | PAGE 69 OF 72 |
| | SHEET 78 OF 81 |

NOTICE OF PROPRIETARY PROPERTY:
THE INFORMATION CONTAINED HEREIN IS THE PROPRIETARY PROPERTY OF APPLE INC.
THE POSESSOR AGREES TO THE FOLLOWING:
I TO MAINTAIN THIS DOCUMENT IN CONFIDENCE
II NOT TO REPRODUCE OR COPY IT
III NOT TO REVEAL OR PUBLISH IT IN WHOLE OR PART
IV ALL RIGHTS RESERVED

# TDD TRANSMIT

## 2G PA

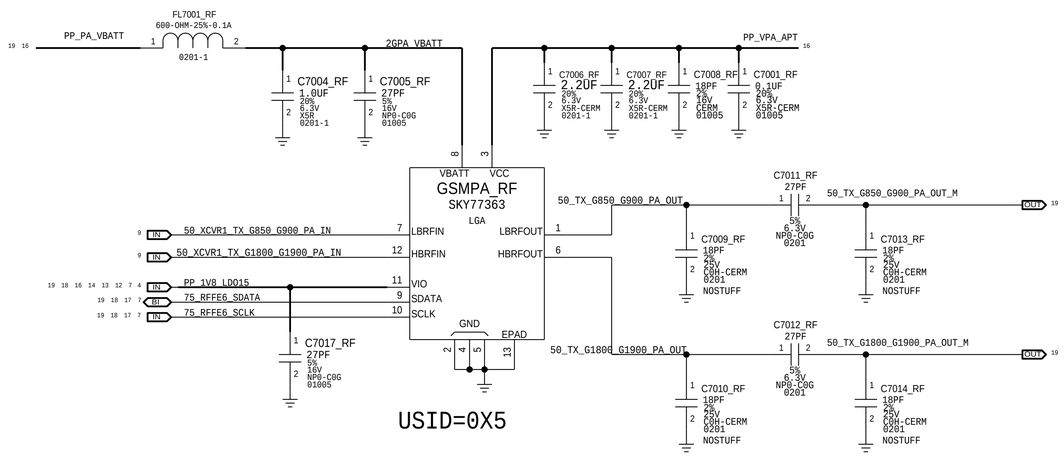


## MB HB TDD PA

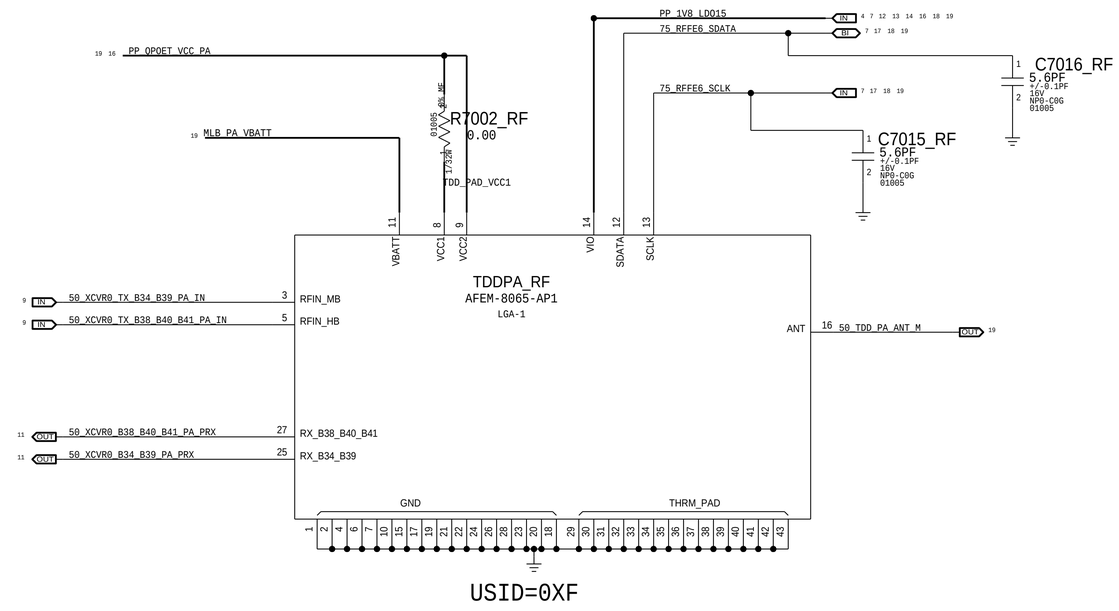


VIETMOBILE.VN

SYNC_DATE=04/17/2015

PAGE TITLE: PAGE_TITLE=TDD TRANSMIT

Apple Inc.

DRAWING NUMBER: 051-00482 | SIZE: D

REVISION: 8.0.0

BRANCH:

PAGE: 70 OF 72

SHEET: 79 OF 81

NOTICE OF PROPRIETARY PROPERTY:
THE INFORMATION CONTAINED HEREIN IS THE PROPRIETARY PROPERTY OF APPLE INC.
THE POSESSOR AGREES TO THE FOLLOWING:
I TO MAINTAIN THIS DOCUMENT IN CONFIDENCE
II NOT TO REPRODUCE OR COPY IT
III NOT TO REVEAL OR PUBLISH IT IN WHOLE OR PART
IV ALL RIGHTS RESERVED

# FDD TRANSMIT

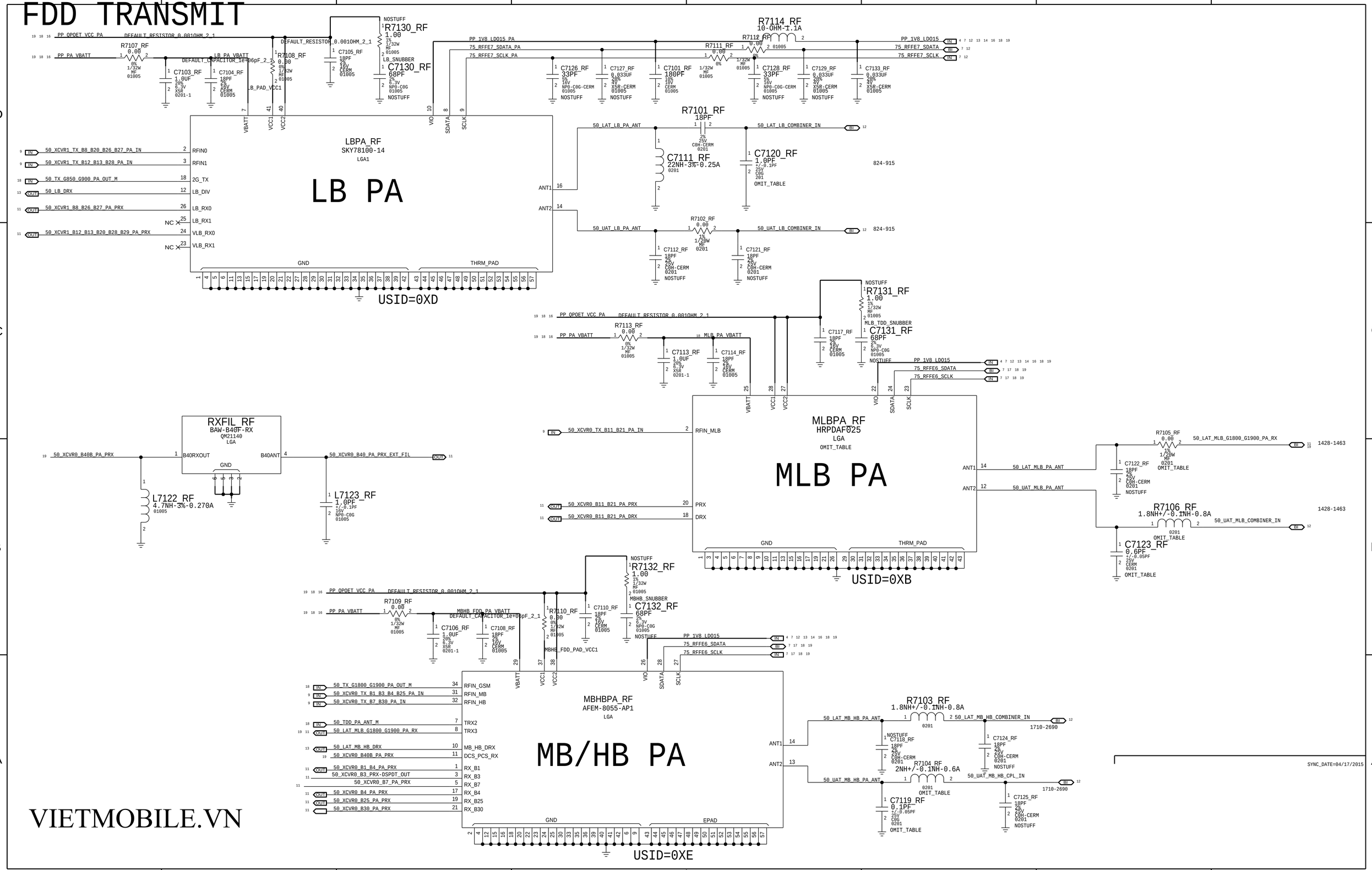


VIETMOBILE.VN

# ICEFALL

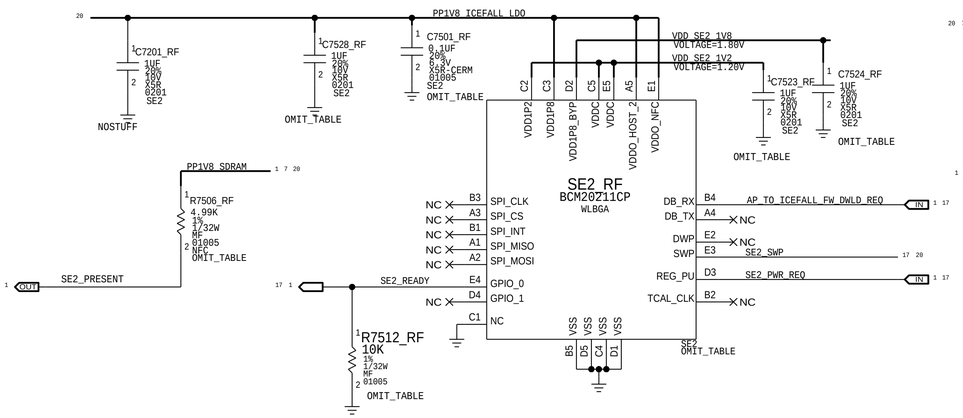


# SWP MUX

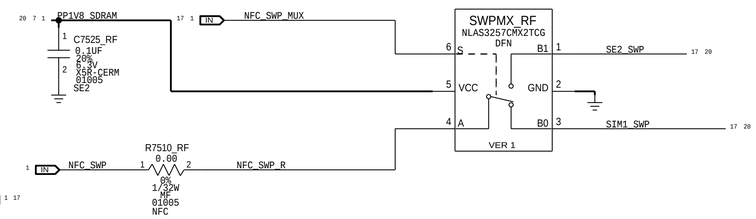


# ICEFALL LDO

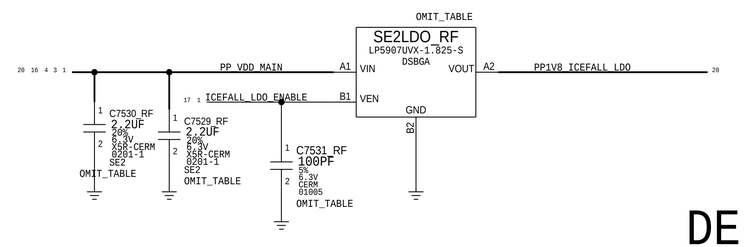


# SIM CARD CONNECTOR

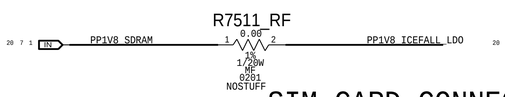


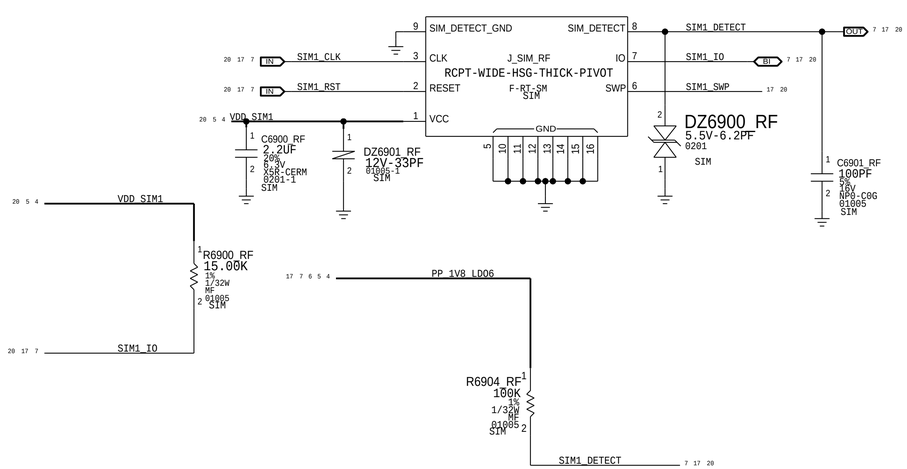


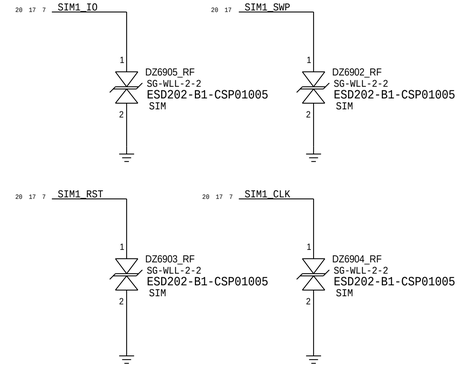


# DEBUG CONNECTOR

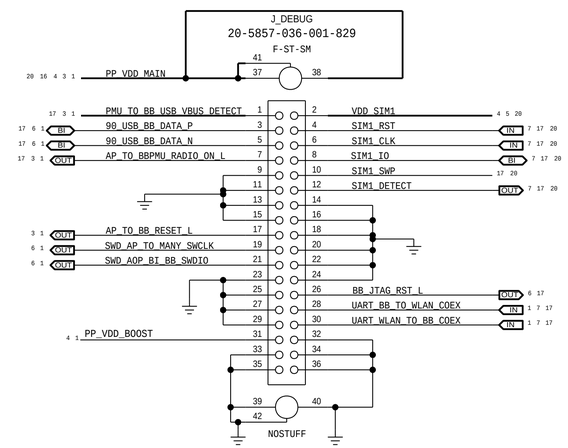


VIETMOBILE.VN